SUPREME STEEL FRAMING SYSTEM ASSOCIATION™ (SSFSA)
Post Office Box 11215
Spokane, Washington 99211
(503) 343-9000
www.ssfsa.com
mail@ssfsa.com

ADDITIONAL COMPANIES AND ADDITIONAL MANUFACTURERS

AllSteel & Gypsum Products, Inc.
1250 NW 23 Ave
Ft. Lauderdale, FL 33311
(954) 587-1900
www.allsteelproducts.com

Consolidated Fabricators Corp.
8584 Mulberry Avenue
Fontana, California 92335
(909) 770-8920
www.confabbpd.com

Quail Run Building Materials, Inc.
2102 West Lone Cactus Drive
Phoenix, Arizona 85027
(602) 269-2316
www.qrbm.com

SCAFCO Steel Stud Manufacturing Company
Post Office Box 11215
Spokane, Washington 99211
(509) 343-9000
www.scafco.com

Steel Construction Systems
11250 Astronaut Boulevard
Orlando, Florida 32837
(800) 548-8499
www.steelconsystems.com

United Metal Products, Inc.
234 North Sherman Avenue
Corona, California 92882
(951) 739-9535
www.unitedmetalproducts.info

R & P Supply
2642 E Lone Mountain RD
Las Vegas, NV 89081
(702) 400-8539
www.rpsupplyinc.com

Telling Industries, LLC
1050 Kennedy Road
Windsor, CT 06095
(860) 731-7975
www.tellingindustries.com

Telling Industries, LLC - Cambridge
2105 Larrick Rd.
Cambridge, OH 73725
(740) 435-8900
www.tellingindustries.com

Telling Industries, LLC – Osceola
1400 Southwire Drive
Osceola, AR 72370
(870) 563-6065
www.tellingindustries.com

COLD-FORMED STEEL FRAMING MEMBERS

CSI Sections:

05 40 00–Cold Formed Metal Framing
05 41 00–Structural Metal Stud Framing
05 42 00–Cold Formed Metal Joist Framing
09 21 16–Gypsum Board Assemblies
09 22 00–Supports for Plaster and Gypsum Board
09 22 16–Non-Structural Metal Stud Framing

1.0 RECOGNITION

Supreme Steel Framing System Association™ (SSFSA) Cold-formed Steel Framing Members have been evaluated for use as floor framing, roof framing, ceiling framing, wall framing, and interior non-load-bearing composite wall framing.

The structural properties of the Cold-formed Steel Framing Members comply with the intent of the provisions of the following codes and regulations:

- 2018, 2015, 2012, and 2009 International Building Code® (IBC)
- 2018, 2015, 2012, and 2009 International Residential Code® (IRC)
- 2020 Florida Building Code, Building (FBC, Building) – Attached Supplement
- 2020 Florida Building Code, Residential (FBC, Residential) – Attached Supplement

The Cold-formed Steel Framing Members comply with IBC Sections 2210 and 2211 and Chapter 25.

2.0 LIMITATIONS

Use of the SSFSA Cold-formed Steel Framing Members recognized in this report are subject to the following limitations:

2.1 Project construction documents verifying compliance with this report shall be prepared and sealed by a registered design professional and submitted, where required by the statutes of the jurisdiction in which the project is to be constructed.

The product described in this Uniform Evaluation Service (UES) Report has been evaluated as an alternative material, design or method of construction in order to satisfy and comply with the intent of the provision of the code, as noted in this report, and for at least equivalence to that prescribed in the code in quality, strength, effectiveness, fire resistance, durability and safety, as applicable, in accordance with IBC Section 104.11. This document shall only be reproduced in its entirety.

Copyright © 2024 by International Association of Plumbing and Mechanical Officials. All rights reserved. Printed in the United States. Ph: 1-877-4IESRPT • Fax: 909.472.4171 web: www.uniform-es.org • 4755 East Philadelphia Street, Ontario, California 91761-2816 – USA

2.2 Minimum uncoated base steel thickness of the framing members delivered to the job site shall be 95 percent of the design thickness shown in applicable tables of this report**.**

2.3 Interior non-load-bearing composite wall assemblies shall be limited to interior installations where the allowable superimposed axial load, other than sheathing, is zero.

2.4 Framing members with a G40 galvanized coating are limited under the **IBC** to use as non-load-bearing interior wall framing with a maximum allowable transverse load of 10 psf (480 Pa).

2.5 Framing members for use under the **IRC** shall have, at a minimum, a G60 galvanized coating.

3.0 PRODUCT USE

3.1 Design

3.1.1 General: Allowable moments in **Tables 1, 2, 5, and 6** of this report are for framing members with the compression flange continuously braced at a spacing less than, or equal to, the tabulated value of L_u for the member. The allowable moment shall be determined in accordance with AISI S100 if the spacing of compression flange bracing exceeds L_u. Flexural member design shall include all applicable failure modes in accordance with AISI S100, including: flexure, deflection, shear, web crippling, combined bending and web crippling, and combined bending and shear. Non-Structural framing members designed in accordance with the 2015 or 2018 IBC shall conform to AISI S220.

3.1.2 Non-load-bearing Composite Walls: Allowable wall heights are shown in **Tables 3A** and **3B** of this report and do not require calculation of wall strength and deflection capacities for framing members and conditions that comply with those values described by the table.

3.1.3 ***International Residential Code®*** **(IRC):** Standard studs listed in **Table 5** of this report and tracks listed in **Table 6** of this report may be used according to the prescriptive requirements of the **IRC**. "SFS" framing members are limited to engineered structures, in accordance with **IRC Section R301.1.3**.

3.2 Installation

3.2.1 General: Steel framing installation shall be in accordance with **ASTM C754**, the approved construction documents, the codes listed in Section 1.0 of this report, AISI S200, AISI S210, AISI S211, AISI S220, or AISI S240, as applicable, and this report. Where differences occur between these documents, the most restrictive shall govern.

3.2.2 Composite Assemblies: Composite assembly spans shall be limited to those in **Tables 3A** and **3B** of this report. Installation of the gypsum board shall comply with **ASTM C840** and the following requirements. The gypsum board shall be attached to the studs with screws spaced a maximum of 12 inches (300 mm) on-center along the studs when the studs are spaced 24 inches (600 mm) on-center, or with screws spaced a maximum of 16 inches (400 mm) on center along the studs when the studs are spaced 16 or 12 inches (400 or 300 mm) on-center. Screws attaching the gypsum board to both the top and bottom tracks shall be spaced a maximum of 1½ inches (40 mm) from the edge of the respective gypsum panel. Gypsum board shall be installed on both sides of the wall, placed with the long dimension of the gypsum board oriented parallel to the length of the stud. Gypsum board and fasteners shall comply with Sections 3.2.2.1 and 3.2.2.2 of this report.

3.2.2.1 Gypsum Board: Gypsum board for composite assemblies shall be ⅝ inch (15.9 mm) Type X conforming to **ASTM C1396** produced by Georgia Pacific, Lafarge, CertainTeed, Temple Inland, National Gypsum, American Gypsum, or USG.

3.2.2.2 Fasteners: Screws attaching the gypsum board to the studs in composite wall assemblies shall be No. 6, Type S, fine thread, bugle head drywall screws conforming to **ASTM C1002**.

4.0 PRODUCT DESCRIPTION

4.1 Product Information: SSFSA framing members described in this report are limited to those section designations in **Tables 1, 2, 5, and 6**, of this report and associated **Figures 1 through 6, 9 and 10** of this report. SSFSA framing members are factory-formed from steel coils. Stud shapes are manufactured with and without web punch-outs. Punch-outs, when provided, are centered on the web and spaced at 24 inches (1200 mm) on center with maximum sizes noted in **Figure 7** of this report. Punch-outs for studs subject to axial load shall be spaced a minimum of 10 inches (250 mm) from each end of the stud to the nearest edge of the punch-out. The end distance for punch-outs in studs not subject to axial compression or tension loads may be reduced below 10 inches (250 mm) if calculations by a registered design professional are submitted to the building official for approval demonstrating the capacity of the framing member computed in accordance with AISI S100 exceeds the required load. **Table 4a** of this report gives guidance on the framing conditions for the minimum distance "x" that permits R_c =1 from AISI S100 Equation C3.4.2.1. Stud properties listed in this report are for members with punch-outs unless otherwise noted. Track properties listed in this report are for members without punch-outs.

Allowable web crippling capacities for concentrated loads and reactions are shown in **Tables 4 and 7** of this report. **Figure 8** of this report provides associated web crippling load and support condition definitions.

4.2 Material Information: Describe the materials used to manufacture the products.

4.2.1 Steel: Framing members are provided with a minimum G40 or G60 coating depending on use. Steel used for the manufacture of SSFSA framing members is as follows:

4.2.1.1: SSFSA "SFS" C-Shaped Stud framing members and SFT Track Framing Members are cold formed from steel coils with a minimum yield strength (F_y) of 57 ksi (388 MPa) and a minimum tensile strength (F_u) of 65 ksi (450 MPa), complying with SSFSA's steel specification, or ASTM A1003 ST57H, Members designated as D25 (50) are formed from ASTM A1003 ST50H or ASTM A653 SS Grade 50 Class 1 material.

4.2.1.2: Standard dimension stud and track framing members are formed from ASTM A653 SS Grade 33, ASTM A1003 ST33H, ASTM A653 SS Grade 50 Class 1, ASTM A1003 ST50H, ASTM A1003 ST57H, or steel with a minimum yield strength (F_y) of 57 ksi (388 MPa) and a minimum tensile strength (F_u) of 65 ksi (450 MPa), complying with SSFSA's steel specification. Availability of standard framing members in these grades of steel are shown in **Tables 5 and 6** of this report.

5.0 IDENTIFICATION

SSFSA standard and "SFS" framing members are stamped, stenciled or embossed at a maximum of 96 inches (2400 mm) on center with the manufacturer's name, the section designation, the minimum uncoated steel thickness, the minimum specified yield strength if over 33 ksi (230 MPa), the G60 metallic coating designation if over G40, and the evaluation report number (IAPMO ES ER-313). Either Mark of Conformity may be also used as shown below:

IAPMO ES ® or UES ®

IAPMO ER-313

6.0 SUBSTANTIATING DATA

6.1 Physical Properties: Calculations in accordance with the Acceptance Criteria for Cold Formed Steel Framing Members (AC46) dated October 2019.

6.2 Composite Wall Data: Testing and Analysis reports in accordance with the ICC-ES Acceptance Criteria for Cold Formed Steel Framing Members - Interior Non-load-bearing Wall Assemblies (AC86) dated June 2019 (editorially revised December 2020).

7.0 STATEMENT OF RECOGNITION

This evaluation report describes the results of research completed by IAPMO Uniform Evaluation Service on the Supreme Steel Framing System Association™ (SSFSA) Cold-formed Steel Framing Members to assess their conformance to the codes shown in Section 1.0 of this report and serves as documentation of the product certification. Products are manufactured under a quality control program with periodic inspection under the supervision of IAPMO UES.

For additional information about this evaluation report please visit www.uniform-es.org or email us at info@uniform-es.org

Definitions of Structural Property Symbols

Gross Section Properties:

I_{xx}: Moment of inertia of the gross section about the X-X axis (strong axis).

R_x: Radius of gyration of the gross section about the X-X axis (strong axis).

I_{yy}: Moment of inertia of the gross section about the Y-Y axis (weak axis).

R_y: Radius of gyration of the gross section about the Y-Y axis (weak axis).

Effective Section Properties:

I_{xxe}: Effective moment of inertia about the X-X axis (strong axis).
See items six and seven in the *General Notes for All Tables* located below.

S_{xxe}: Effective section modulus about the X-X axis (strong axis).

$M_{a\text{-}L}$: Allowable moment at yield, based on local buckling.

$M_{a\text{-}D}$: Allowable moment based on distortional buckling $k\varphi = 0$, per AISI S100 C3.1.4.

V_{ag}: Allowable strong axis shear away from punch-outs, per AISI S100 C3.2.1.

Torsional Section Properties:

J: St. Venant torsional constant.

C_w: Torsional warping constant.

X_o: Distance from shear center to the centroid along the principal X-axis.

m: Distance from shear center to the mid-plane of the web.

R_o: Polar radius of gyration about the centroidal principal axis.

ß: $1-(X_o/R_o)^2$

L_u: The longest weak axis (L_y) and torsional (L_t) unbraced length at which lateral-torsional buckling is restrained in accordance with AISI S100 C3.1.2.1.

General Notes for All Tables:

1. Where *AISI S100* is referenced, it is the "North American Specification for the Design of Cold-Formed Steel Structural Members", (AISI S100-12).
2. The strength increase from cold work of forming has been incorporated for flexural strength in accordance with AISI S100 Section A7.2, where applicable.
3. Various sections may be manufactured with yield points of 33, 50 or 57 ksi. The yield point used for calculations is indicated in the tables.
4. For sections available in multiple yield points 33, 50 or 57 ksi, the specifier shall clearly indicate which yield point is required. For example: 362S162-54 (50).
5. When provided, factory punch-outs shall be located along the centerline of the webs of the members and shall have a minimum center-to-center spacing of 24 inches. Punch-outs for members greater than 2.5 inches deep are a maximum of 1.5 inches wide by 4 inches long. Members with depths 2.5 inches and smaller are maximum 0.75 inches wide by 4 inches long.
6. For deflection determination, the effective moment of inertia shall be used. Effective moment of inertia is based on Procedure 1, Section C3.1.1, of AISI S100.
7. The effective moment of inertia for deflection is calculated at a stress that results in a section modulus such that the stress times the section modulus at that stress is equal to the allowable local buckling moment.
8. Tabulated gross properties are based on the full, unreduced section away from punch-outs.

Table 1: SFS C-Shaped Stud Section Properties

Section	Design Thickness	Fy	Gross Properties						Effective Properties[1,2]					Torsional Properties						L_u
			Area	Weight	I_{xx}	R_x	I_{yy}	R_y	I_{xxe}	S_{xxe}	$M_{a\text{-}L}$	$M_{a\text{-}D}$	V_{ag}	Jx1000	C_w	X_o	m	R_o	ß	
	(in)	(ksi)	(in^2)	(lb/ft)	(in^4)	(in)	(in^4)	(in)	(in^4)	(in^3)	(in-k)	(in-k)	(lb)	(in^4)	(in^6)	(in)	(in)	(in)		(in)
162SFS-D25 (50)	0.0155	50	0.070	0.24	0.033	0.682	0.015	0.470	0.031	N/A	0.67	0.66	233	0.006	0.011	-1.127	0.651	1.399	0.351	24.4
162SFS-D25 (57)	0.0155	57	0.070	0.24	0.033	0.682	0.015	0.470	0.031	N/A	0.66	0.73	233	0.006	0.011	-1.127	0.651	1.399	0.351	24.4
162SFS125-D20	0.0188	57	0.087	0.30	0.040	0.675	0.020	0.480	0.037	0.035	1.21	1.20	397	0.010	0.016	-1.182	0.683	1.444	0.329	26.1
162SFS-D20	0.0188	57	0.094	0.32	0.044	0.686	0.028	0.545	0.043	N/A	0.95	1.08	397	0.011	0.022	-1.365	0.779	1.622	0.292	29.1
162SFS125-30EQD	0.0235	57	0.109	0.37	0.049	0.673	0.025	0.478	0.048	0.047	1.60	1.56	621	0.020	0.020	-1.177	0.680	1.438	0.330	31.2
162SFS-30EQD	0.0235	57	0.117	0.40	0.055	0.684	0.035	0.543	0.052	0.048	1.63	1.70	621	0.022	0.027	-1.359	0.776	1.616	0.292	29.0
250SFS-D25 (50)	0.0155	50	0.083	0.28	0.086	1.015	0.018	0.465	0.080	N/A	1.15	1.04	144	0.007	0.025	-0.994	0.595	1.495	0.558	24.0
250SFS-D25 (57)	0.0155	57	0.083	0.28	0.086	1.015	0.018	0.465	0.079	N/A	1.26	1.16	144	0.007	0.025	-0.994	0.595	1.495	0.558	24.0
250SFS125-D20	0.0188	57	0.104	0.35	0.106	1.011	0.024	0.477	0.101	0.066	2.26	1.91	258	0.012	0.035	-1.045	0.625	1.530	0.534	25.1
250SFS-D20	0.0188	57	0.111	0.38	0.117	1.027	0.033	0.545	0.112	N/A	1.75	1.72	258	0.013	0.049	-1.217	0.719	1.683	0.477	28.1
250SFS125-30EQD	0.0235	57	0.129	0.44	0.131	1.009	0.029	0.475	0.128	0.088	2.99	2.50	505	0.024	0.043	-1.040	0.622	1.524	0.535	25.0
250SFS-30EQD	0.0235	57	0.138	0.47	0.145	1.025	0.041	0.542	0.136	0.090	3.06	2.68	505	0.025	0.060	-1.212	0.716	1.677	0.478	28.0
250SFS162-33EQS	0.0295	57	0.191	0.65	0.202	1.029	0.075	0.626	0.195	0.134	4.57	4.17	978	0.055	0.127	-1.475	0.863	1.905	0.400	33.4
250SFS162-43EQS	0.0400	57	0.257	0.88	0.270	1.025	0.100	0.622	0.270	0.185	6.32	6.26	1798	0.137	0.166	-1.463	0.856	1.892	0.402	33.4
250SFS200-43EQS	0.0400	57	0.297	1.01	0.320	1.038	0.177	0.771	0.311	0.215	7.34	7.14	1798	0.159	0.344	-1.920	1.104	2.315	0.312	39.4

(Table 1 continued on next page.)

Table 1: SFS C-Shaped Stud Section Properties (Continued)

Section	Design Thickness	Fy	Gross Properties						Effective Properties[1,2]					Torsional Properties						L_u
			Area	Weight	I_{xx}	R_x	I_{yy}	R_y	I_{xxe}	S_{xxe}	M_{a-L}	M_{a-D}	V_{ag}	Jx1000	C_w	X_o	m	R_o	ß	
	(in)	(ksi)	(in^2)	(lb/ft)	(in^4)	(in)	(in^4)	(in)	(in^4)	(in^3)	(in-k)	(in-k)	(lb)	(in^4)	(in^6)	(in)	(in)	(in)		(in)
350SFS-D25[3] (50)	0.0155	50	0.099	0.34	0.186	1.373	0.020	0.451	0.166	N/A	1.62	1.45	N/A	0.008	0.051	-0.880	0.543	1.692	0.730	23.6
350SFS-D25[3] (57)	0.0155	57	0.099	0.34	0.186	1.373	0.020	0.451	0.166	N/A	1.75	1.66	N/A	0.008	0.051	-0.880	0.543	1.692	0.730	23.6
350SFS125-D20	0.0188	57	0.123	0.42	0.231	1.372	0.026	0.464	0.222	0.083	2.82	2.73	180	0.014	0.070	-0.926	0.571	1.719	0.710	24.5
350SFS-D20	0.0188	57	0.130	0.44	0.252	1.395	0.037	0.533	0.235	N/A	2.40	2.47	180	0.015	0.097	-1.088	0.662	1.847	0.653	27.6
350SFS125-30EQD	0.0235	57	0.153	0.52	0.286	1.370	0.033	0.462	0.286	0.110	3.77	3.56	351	0.028	0.086	-0.921	0.568	1.714	0.711	24.5
350SFS-30EQD	0.0235	57	0.161	0.55	0.313	1.392	0.046	0.531	0.304	0.112	3.83	3.84	351	0.030	0.119	-1.083	0.659	1.842	0.655	27.6
350SFS162-33EQS	0.0295	57	0.220	0.75	0.436	1.407	0.085	0.619	0.425	0.179	6.10	6.02	696	0.064	0.239	-1.330	0.799	2.032	0.572	32.5
350SFS162-43EQS	0.0400	57	0.297	1.01	0.585	1.402	0.112	0.615	0.585	0.257	8.78	9.12	1738	0.159	0.315	-1.318	0.792	2.020	0.574	32.3
350SFS200-43EQS	0.0400	57	0.337	1.15	0.688	1.429	0.200	0.771	0.675	0.301	10.28	10.33	1738	0.180	0.617	-1.754	1.035	2.389	0.461	38.4
362SFS-D25[3] (50)	0.0155	50	0.101	0.34	0.202	1.416	0.020	0.449	0.179	N/A	1.63	1.51	N/A	0.008	0.055	-0.867	0.537	1.720	0.746	23.6
362SFS-D25[3] (57)	0.0155	57	0.101	0.34	0.202	1.416	0.020	0.449	0.180	N/A	1.84	1.72	N/A	0.008	0.055	-0.867	0.537	1.720	0.746	23.6
362SFS125-D20	0.0188	57	0.125	0.42	0.250	1.416	0.027	0.462	0.242	0.086	2.92	2.86	173	0.015	0.076	-0.914	0.565	1.747	0.727	24.5
362SFS-D20	0.0188	57	0.132	0.45	0.273	1.439	0.037	0.531	0.254	N/A	2.52	2.56	173	0.016	0.104	-1.074	0.655	1.873	0.671	27.6
362SFS125-30EQD	0.0235	57	0.156	0.53	0.311	1.414	0.033	0.460	0.311	0.115	3.91	3.70	338	0.029	0.093	-0.909	0.562	1.742	0.728	24.4
362SFS-30EQD	0.0235	57	0.164	0.56	0.339	1.437	0.046	0.529	0.331	0.116	3.97	3.98	338	0.030	0.128	-1.069	0.652	1.867	0.672	27.5
362SFS162-33EQS	0.0295	57	0.224	0.76	0.473	1.452	0.086	0.618	0.462	0.186	6.34	6.25	670	0.065	0.257	-1.314	0.792	2.054	0.591	32.4
362SFS162-43EQS	0.0400	57	0.302	1.03	0.634	1.448	0.114	0.613	0.634	0.267	9.12	9.48	1674	0.161	0.338	-1.302	0.785	2.042	0.593	32.3
362SFS200-43EQS	0.0400	57	0.342	1.16	0.746	1.476	0.203	0.770	0.732	0.314	10.70	10.74	1674	0.183	0.659	-1.735	1.027	2.404	0.479	38.4
400SFS-D25[3] (50)	0.0155	50	0.107	0.36	0.255	1.545	0.021	0.443	0.223	N/A	1.67	1.66	N/A	0.009	0.069	-0.833	0.521	1.810	0.788	23.4
400SFS-D25[3] (57)	0.0155	57	0.107	0.36	0.255	1.545	0.021	0.443	0.223	N/A	2.10	1.90	N/A	0.009	0.069	-0.833	0.521	1.810	0.788	23.4
400SFS125-D20	0.0188	57	0.132	0.45	0.315	1.546	0.028	0.457	0.306	0.095	3.24	3.14	156	0.016	0.093	-0.878	0.547	1.836	0.771	24.3
400SFS-D20	0.0188	57	0.139	0.47	0.343	1.572	0.038	0.526	0.314	N/A	2.86	2.84	156	0.016	0.129	-1.034	0.637	1.954	0.720	27.5
400SFS125-30EQ	0.0235	57	0.164	0.56	0.392	1.544	0.034	0.454	0.392	0.127	4.34	4.11	305	0.030	0.115	-0.873	0.545	1.831	0.773	24.2
400SFS-30EQD	0.0235	57	0.173	0.59	0.427	1.569	0.047	0.524	0.417	0.129	4.40	4.41	305	0.032	0.159	-1.029	0.634	1.949	0.721	27.4
400SFS162-33EQS	0.0295	57	0.235	0.80	0.593	1.589	0.088	0.613	0.581	0.206	7.04	6.95	604	0.068	0.314	-1.269	0.771	2.124	0.643	32.2
400SFS162-43EQS	0.0400	57	0.317	1.08	0.796	1.584	0.118	0.609	0.796	0.298	10.16	10.57	1508	0.169	0.413	-1.258	0.765	2.112	0.645	32.0
400SFS200-43EQS	0.0400	57	0.357	1.22	0.935	1.617	0.210	0.767	0.919	0.350	11.94	11.96	1508	0.191	0.795	-1.682	1.004	2.456	0.531	38.2
550SFS125-D20[5]	0.0188	57	0.160	0.55	0.673	2.050	0.030	0.433	*See note 5 below*					0.019	0.188	-0.761	0.489	2.229	0.883	N/A
550SFS125-30EQD[3]	0.0235	57	0.200	0.68	0.837	2.048	0.037	0.431	0.788	0.197	6.73	5.67	218	0.037	0.231	-0.757	0.487	2.225	0.884	23.7
550SFS-30EQD[3]	0.0235	57	0.208	0.71	0.903	2.081	0.052	0.500	0.896	0.204	6.97	6.09	218	0.038	0.320	-0.900	0.571	2.322	0.850	26.9
550SFS162-33EQS	0.0295	57	0.279	0.95	1.249	2.115	0.098	0.591	1.235	0.333	11.36	9.72	433	0.081	0.615	-1.119	0.700	2.464	0.794	31.5
550SFS162-43EQS	0.0400	57	0.377	1.28	1.679	2.110	0.130	0.587	1.679	0.515	17.59	14.95	1079	0.201	0.813	-1.108	0.694	2.454	0.796	31.3
550SFS200-43EQS	0.0400	57	0.417	1.42	1.951	2.162	0.234	0.748	1.933	0.589	20.10	16.90	1079	0.223	1.516	-1.502	0.921	2.737	0.699	37.7
600SFS-D25[4] (50)	0.0155	50	0.138	0.47	0.670	2.207	0.023	0.411	*See note 4 below*					0.011	0.170	-0.685	0.450	2.347	0.920	N/A
600SFS-D25[4] (57)	0.0155	57	0.138	0.47	0.670	2.207	0.023	0.411	*See note 4 below*					0.011	0.170	-0.685	0.450	2.347	0.920	N/A
600SFS125-D20[5]	0.0188	57	0.169	0.58	0.830	2.214	0.031	0.425	*See note 5 below*					0.020	0.228	-0.730	0.473	2.369	0.905	N/A
600SFS-D20[4]	0.0188	57	0.177	0.60	0.894	2.250	0.043	0.494	*See note 4 below*					0.021	0.314	-0.869	0.556	2.462	0.875	N/A
600SFS125-30EQD[3]	0.0235	57	0.211	0.72	1.033	2.211	0.038	0.423	0.959	0.216	7.37	6.14	200	0.039	0.281	-0.725	0.470	2.365	0.906	23.5
600SFS-30EQD[3]	0.0235	57	0.220	0.75	1.112	2.247	0.053	0.492	0.976	0.219	7.46	6.60	200	0.041	0.388	-0.864	0.553	2.457	0.876	26.7
600SFS162-33EQS	0.0295	57	0.294	1.00	1.535	2.285	0.100	0.583	1.522	0.363	12.38	10.62	395	0.085	0.743	-1.078	0.680	2.592	0.827	31.3
600SFS162-43EQS	0.0400	57	0.397	1.35	2.065	2.280	0.133	0.579	2.065	0.559	19.08	16.37	986	0.212	0.983	-1.067	0.673	2.583	0.829	31.1
600SFS200-43EQS	0.0400	57	0.437	1.49	2.390	2.338	0.240	0.741	2.374	0.640	21.85	18.54	986	0.233	1.822	-1.452	0.897	2.850	0.741	37.5
800SFS162-43EQS	0.0400	57	0.477	1.62	4.128	2.941	0.143	0.548	3.870	0.706	24.11	21.67	732	0.255	1.862	-0.931	0.603	3.133	0.912	30.4
800SFS200-43EQS	0.0400	57	0.517	1.76	4.721	3.021	0.261	0.710	4.721	0.848	28.94	24.89	732	0.276	3.400	-1.283	0.814	3.358	0.854	36.9

1. *Effective properties of all SFS members are based on punched members.*
2. *Effective properties of all SFS members do not include the strength increase form cold work of forming per AISI S100 Section A7.2.*
3. *Web h/t exceeds 200. Uses not in conformance with the composite wall assemblies in Section 3.1.2 and Section 3.2.2 of this report may have additional AISI S100 requirements related to this limit, including the need for web stiffeners, which the member designer shall determine.*
4. *Web h/t exceeds 260. Member is not in compliance with AISI S100 Section B1.2 for steel only design, but may be used in composite wall assemblies described in Section 3.1.2 and Section 3.2.2 of this report. See Table 3A for Interior Composite Limiting Wall Heights of this member.*
5. *Web h/t exceeds 260. Member is not in compliance with AISI S100 Section B1.2 for steel only design, but may be used in composite wall assemblies described in Section 3.1.2 and Section 3.2.2 of this report. Composite limiting wall heights for 550SFS125-D20 members may use Table 3B heights listed for 550S125-18, and 600SFS125-D20 members may use Table 3B heights listed for 600S125-18.*

Table 2: SFT Track Section Properties

Section	Design Thickness	Fy	Gross Properties						Effective Properties				Torsional Properties					
			Area	Weight	I_{xx}	R_x	I_{yy}	R_y	I_{xxe}	S_{xxe}	M_a	V_{ag}	Jx1000	C_w	X_o	m	R_o	ß
	(in)	(ksi)	(in^2)	(lb/ft)	(in^4)	(in)	(in^4)	(in)	(in^4)	(in^3)	(in-k)	(lb)	(in^4)	(in^6)	(in)	(in)	(in)	
162SFT125-D25 (50)	0.0155	50	0.064	0.22	0.034	0.733	0.011	0.412	0.022	N/A	0.37	215	0.005	0.006	-0.878	0.504	1.216	0.478
162SFT125-D25 (57)	0.0155	57	0.064	0.22	0.034	0.733	0.011	0.412	0.022	N/A	0.37	215	0.005	0.006	-0.878	0.504	1.216	0.478
162SFT125-D20	0.0188	57	0.077	0.26	0.042	0.733	0.013	0.411	0.029	0.023	0.79	384	0.009	0.007	-0.878	0.503	1.215	0.478
162SFT125-30EQD	0.0235	57	0.097	0.33	0.052	0.734	0.016	0.410	0.038	0.031	1.06	621	0.018	0.009	-0.874	0.502	1.213	0.481
250SFT125-D25 (50)	0.0155	50	0.078	0.26	0.086	1.051	0.012	0.400	0.054	N/A	0.61	137	0.006	0.015	-0.769	0.460	1.363	0.682
250SFT125-D25 (57)	0.0155	57	0.078	0.26	0.086	1.051	0.012	0.400	0.054	N/A	0.61	137	0.006	0.015	-0.769	0.460	1.363	0.682
250SFT125-D20	0.0188	57	0.094	0.32	0.104	1.051	0.015	0.400	0.078	0.036	1.23	245	0.011	0.018	-0.769	0.460	1.362	0.681
250SFT125-30EQD	0.0235	57	0.118	0.40	0.130	1.052	0.019	0.399	0.100	0.053	1.80	478	0.022	0.023	-0.765	0.458	1.361	0.684
250SFT125-33EQS	0.0295	57	0.148	0.50	0.164	1.053	0.023	0.398	0.130	0.077	2.61	944	0.043	0.028	-0.762	0.457	1.359	0.685
250SFT125-43EQS	0.0400	57	0.200	0.68	0.222	1.053	0.031	0.396	0.186	0.114	3.88	1798	0.107	0.038	-0.758	0.454	1.356	0.688
350SFT125-D25[2] (50)	0.0155	50	0.093	0.32	0.181	1.395	0.014	0.383	0.114	N/A	0.91	N/A	0.007	0.032	-0.676	0.419	1.597	0.821
350SFT125-D25[2] (57)	0.0155	57	0.093	0.32	0.181	1.395	0.014	0.383	0.114	N/A	0.91	N/A	0.007	0.032	-0.676	0.419	1.597	0.821
350SFT125-D20	0.0188	57	0.113	0.38	0.219	1.394	0.017	0.383	0.173	0.051	1.73	173	0.013	0.038	-0.675	0.418	1.595	0.821
350SFT125-30EQD	0.0235	57	0.141	0.48	0.275	1.396	0.021	0.381	0.221	0.074	2.51	338	0.026	0.048	-0.673	0.417	1.595	0.822
350SFT125-33EQS	0.0295	57	0.177	0.60	0.345	1.396	0.026	0.380	0.286	0.114	3.87	668	0.051	0.060	-0.670	0.415	1.595	0.823
350SFT125-43EQS	0.0400	57	0.240	0.82	0.467	1.396	0.034	0.378	0.404	0.184	6.28	1661	0.128	0.080	-0.666	0.413	1.592	0.825
362SFT125-D25[2] (50)	0.0155	50	0.095	0.32	0.196	1.437	0.014	0.381	0.123	N/A	0.95	N/A	0.008	0.034	-0.666	0.414	1.629	0.833
362SFT125-D25[2] (57)	0.0155	57	0.095	0.32	0.196	1.437	0.014	0.381	0.123	N/A	0.95	N/A	0.008	0.034	-0.666	0.414	1.629	0.833
362SFT125-D20	0.0188	57	0.115	0.39	0.237	1.436	0.017	0.380	0.188	0.053	1.80	167	0.014	0.042	-0.665	0.413	1.627	0.833
362SFT125-30EQD	0.0235	57	0.144	0.49	0.297	1.437	0.021	0.379	0.240	0.076	2.60	326	0.027	0.052	-0.663	0.412	1.628	0.834
362SFT125-33EQS	0.0295	57	0.181	0.61	0.374	1.438	0.026	0.378	0.311	0.117	4.00	644	0.052	0.065	-0.660	0.411	1.627	0.835
362SFT125-43EQS	0.0400	57	0.245	0.83	0.506	1.438	0.035	0.376	0.439	0.194	6.61	1603	0.131	0.087	-0.656	0.408	1.625	0.837
400SFT125-D25[2] (50)	0.0155	50	0.101	0.34	0.246	1.561	0.014	0.374	0.153	N/A	1.08	N/A	0.008	0.043	-0.638	0.401	1.728	0.864
400SFT125-D25[2] (57)	0.0155	57	0.101	0.34	0.246	1.561	0.014	0.374	0.153	N/A	1.08	N/A	0.008	0.043	-0.638	0.401	1.728	0.864
400SFT125-D20[2]	0.0188	57	0.122	0.42	0.297	1.560	0.017	0.374	0.239	0.058	1.98	151	0.014	0.052	-0.637	0.400	1.726	0.864
400SFT125-30EQD	0.0235	57	0.153	0.52	0.373	1.562	0.021	0.373	0.305	0.084	2.87	295	0.028	0.065	-0.635	0.399	1.727	0.865
400SFT125-33EQS	0.0295	57	0.192	0.65	0.468	1.562	0.027	0.372	0.394	0.129	4.39	583	0.056	0.081	-0.632	0.397	1.726	0.866
400SFT125-43EQS	0.0400	57	0.260	0.88	0.634	1.562	0.036	0.370	0.556	0.224	7.65	1450	0.139	0.109	-0.628	0.395	1.724	0.867
550SFT125-30EQD[2]	0.0235	57	0.188	0.64	0.787	2.046	0.023	0.348	0.568	0.113	3.99	213	0.035	0.134	-0.545	0.353	2.146	0.936
550SFT125-33EQS	0.0295	57	0.236	0.80	0.988	2.046	0.029	0.347	0.776	0.169	5.75	422	0.068	0.167	-0.542	0.352	2.145	0.936
550SFT125-43EQS	0.0400	57	0.320	1.09	1.339	2.046	0.038	0.345	1.160	0.284	9.70	1049	0.171	0.224	-0.539	0.349	2.144	0.937
600SFT125-D25[1] (50)	0.0155	50	0.132	0.45	0.640	2.203	0.015	0.342	*See note 1 below*				0.011	0.108	-0.523	0.342	2.290	0.948
600SFT125-D25[1] (57)	0.0155	57	0.132	0.45	0.640	2.203	0.015	0.342	*See note 1 below*				0.011	0.108	-0.523	0.342	2.290	0.948
600SFT125-D20[1]	0.0235	57	0.160	0.54	0.776	2.204	0.019	0.342	*See note 1 below*				0.019	0.131	-0.522	0.341	2.290	0.948
600SFT125-30EQD[2]	0.0235	57	0.200	0.68	0.970	2.204	0.023	0.341	0.690	0.124	4.24	195	0.037	0.163	-0.520	0.340	2.290	0.948
600SFT125-33EQS[2]	0.0295	57	0.251	0.85	1.218	2.204	0.029	0.340	0.946	0.185	6.31	386	0.073	0.204	-0.518	0.339	2.289	0.949
600SFT125-43EQS	0.0400	57	0.340	1.16	1.650	2.204	0.039	0.338	1.420	0.313	10.67	961	0.181	0.273	-0.515	0.336	2.288	0.949
800SFT125-43EQS[2]	0.0400	57	0.420	1.43	3.345	2.823	0.041	0.312	2.794	0.426	14.54	718	0.224	0.525	-0.437	0.293	2.874	0.977

1. *h/t exceeds 260. This section is not in compliance with AISI S100 section B1.2 for steel only design but may be used in accordance with the composite wall assemblies included in sections 3.1.2 and 3.2.2 of this report.*
2. *h/t of web exceeds 200. Use in wall assemblies that are not in conformance with composite wall assemblies in sections 3.1.2 and 3.2.2 of this report may have additional AISI S100 requirements related to this limit, including the need for web stiffeners, which the structural designer shall determine.*
3. *Effective properties do not include the strength increase from cold work of forming as set forth in AISI S100 section A7.2.*
4. *SFT track sections are considered unpunched.*

Table 3A: Interior Composite Limiting Wall Heights for "SFS" Framing with 5/8" Type X Gypsum Board

Member Size	Spacing (in)	5 (psf)						7.5 (psf)						10 (psf)					
		L/120		L/240		L/360		L/120		L/240		L/360		L/120		L/240		L/360	
		ft	in	ft	in	ft	in	ft	in	ft	in	ft	in	ft	in	ft	in	ft	in
162SFS-D25 (50)	12	13	4	10	10	9	8	11	8	9	7	8	6	10	7	8	9	-	-
	16	12	1	10	0	8	10	10	7	8	9	-	-	9	5f	-	-	-	-
	24	10	7	8	9	-	-	8	10f	-	-	-	-	-	-	-	-	-	-
250SFS- D25 (50)	12	15	8	13	7	12	2	13	8	11	11	10	7	11	11f	10	10	9	7
	16	14	3	12	4	11	0	11	11f	10	10	9	7	10	4f	9	10	8	6
	24	11	11f	10	10	9	7	9	9f	9	4	8	1	8	5f	8	4	-	-
362SFS D25 (50)	12	21	3f	17	3	15	1	17	4f	15	1	13	2	15	0f	13	9	12	0
	16	18	5f	15	8	13	9	15	0f	13	9	12	0	13	0f	12	6	10	9
	24	15	0f	13	9	12	0	12	3f	12	0	10	4	10	8f	10	8f	9	3
400SFS- D25 (50)	12	21	3f	17	7	15	8	17	4f	15	4	13	9	15	0f	14	0	12	6
	16	18	4f	16	0	14	3	15	0f	14	0	12	6	13	0f	12	8	11	4
	24	15	0f	14	0	12	6	12	3f	12	2	10	11	10	7f	10	7f	9	11
600SFS D25 (50)	12	26	10f	24	4	21	7	21	11f	21	3	18	10	19	0f	19	0f	17	2
	16	23	3f	22	1	19	8	19	0f	19	0f	17	2	16	5f	16	5f	15	7
	24	19	0f	19	0f	17	2	15	6f	15	6f	14	11	13	5f	13	5f	13	5
162SFS-D25 (57)	12	13	4	10	10	9	8	11	8	9	7	8	6	10	7	8	9	-	-
	16	12	1	9	12	8	10	10	7	8	9	-	-	9	7	7	11	-	-
	24	10	7	8	9	-	-	9	3	-	-	-	-	8	2f	-	-	-	-
250SFS-D25 (57)	12	15	8	13	7	12	2	13	8	11	11	10	7	12	5	10	10	9	7
	16	14	3	12	4	11	0	12	5	10	10	9	7	11	1f	9	10	8	6
	24	12	5	10	10	9	7	10	5f	9	4	8	1	9	0f	8	4	-	-
362SFS-D25 (57)	12	21	9	17	3	15	1	18	6f	15	1	13	2	16	1f	13	9	12	0
	16	19	8f	15	8	13	9	16	1f	13	9	12	0	13	11f	12	6	10	9
	24	16	1f	13	9	12	0	13	1f	12	0	10	4	11	4f	10	9	9	3
400SFS-D25 (57)	12	21	8	17	7	15	8	18	6f	15	4	13	9	16	0f	14	0	12	6
	16	19	7f	16	0	14	3	16	0f	14	0	12	6	13	10f	12	8	11	4
	24	16	0f	14	0	12	6	13	1f	12	2	10	11	11	4f	11	1	9	11
600SFS-D25 (57)	12	28	8f	24	4	21	7	23	5f	21	3	18	10	20	3f	19	3	17	2
	16	24	10f	22	1	19	8	20	3f	19	3	17	2	17	7f	17	6	15	7
	24	20	3f	19	3	17	2	16	7f	16	7f	14	11	14	4f	14	4f	13	5
162SFS-D20	12	13	7	11	1	9	9	11	11	9	9	8	6	10	10	8	10	7	9
	16	12	4	10	1	8	10	10	10	8	10	7	9	9	10	8	1	-	-
	24	10	10	8	10	7	9	9	5	7	9	-	-	8	5	-	-	-	-
250SFS-D20	12	17	1	14	0	12	5	14	11	12	3	10	10	13	7	11	1	9	10
	16	15	6	12	9	11	3	13	7	11	1	9	10	12	4	10	1	8	8
	24	13	7	11	1	9	10	11	8f	9	8	8	2	10	2f	8	7	-	-
362SFS-D20	12	22	4	17	9	15	6	19	6	15	6	13	7	17	3f	14	1	12	4
	16	20	4	16	1	14	1	17	3f	14	1	12	4	15	0f	12	10	11	1
	24	17	3f	14	1	12	4	14	1f	12	4	10	8	12	3f	11	1	9	7
400SFS-D20	12	23	1	18	4	16	0	20	2	16	0	14	0	17	8f	14	6	12	8
	16	21	0	16	8	14	6	17	8f	14	6	12	8	15	3f	13	2	11	6
	24	17	8f	14	6	12	8	14	5f	12	8	11	1	12	6f	11	6	10	0
600SFS-D20	12	31	2	24	9	21	7	25	11f	21	7	18	10	22	6f	19	7	17	2
	16	27	6f	22	6	19	7	22	6f	19	7	17	2	19	6f	17	10	15	7
	24	22	6f	19	7	17	2	18	4f	17	2	14	10	15	11f	15	7	13	4
162SFS-30EQD	12	13	11	11	4	10	0	12	2	9	11	8	8	11	0	9	0	7	10
	16	12	8	10	4	9	1	11	0	9	0	7	10	10	0	8	1	-	-
	24	11	0	9	0	7	10	9	7	7	9	-	-	8	6	-	-	-	-
250SFS-30EQD	12	18	2	14	5	12	7	15	10	12	7	11	0	14	5	11	5	10	0
	16	16	6	13	1	11	5	14	5	11	5	10	0	13	1	10	5	8	11
	24	14	5	11	5	10	0	12	7	10	0	8	6	11	0f	8	11	-	-
362SFS-30EQD	12	23	6	18	8	16	4	20	6	16	4	14	3	18	8	14	10	12	11
	16	21	4	16	11	14	10	18	8	14	10	12	11	16	5f	13	5	11	9
	24	18	8	14	10	12	11	15	6f	12	11	11	3	13	5f	11	9	10	2
400SFS-30EQD	12	25	0	19	10	17	4	21	10	17	4	15	2	19	8f	15	9	13	9
	16	22	9	18	1	15	9	19	8f	15	9	13	9	17	0f	14	4	12	6
	24	19	8f	15	9	13	9	16	0f	13	9	12	0	13	11f	12	6	10	11
600SFS-30EQD	12	33	8	26	9	23	4	28	4f	23	4	20	5	24	6f	21	2	18	6
	16	30	0f	24	3	21	2	24	6f	21	2	18	6	21	3f	19	3	16	10
	24	24	6f	21	2	18	6	20	0f	18	6	16	2	17	4f	16	10	14	8

1. *Allowable composite limiting heights are calculated for the tabulated loads and deflections in accordance with ICC-ES AC86-2012.*
2. *The gypsum board shall be applied full height to each stud flange and installed using minimum No. 6 Type S Drywall screws spaced a maximum of 12 inches on-center for studs at 24-inch spacing, and 16 inches on-center for studs at 16 and 12-inch spacing. Vertical orientation of the GWB is required.*
3. *No fasteners are required for attaching the stud to the track.*
4. *Stud end bearing shall be a minimum of 1 inch.*
5. *'f' adjacent to the height value indicates that flexural stress controls the allowable wall height.*

Table 3B: Interior Composite Limiting Wall Heights for "S" Framing with 5/8" Type X Gypsum Board

Member Size	Spacing (in)	5 psf						7.5 psf						10 psf					
		L/120		L/240		L/360		L/120		L/240		L/360		L/120		L/240		L/360	
		ft	in	ft	in	ft	in	ft	in	ft	in	ft	in	ft	in	ft	in	ft	in
162S125-18	12	13	0f	11	1	9	10	10	8f	9	8	8	7	9	3f	8	9	7	9
	16	11	3f	10	1	8	11	9	3f	8	9	7	9	8	0f	7	11	-	-
	24	9	3f	8	9	7	9	-	-	-	-	-	-	-	-	-	-	-	-
162S125-30	12	14	11	11	10	10	4	13	1	10	4	8	11	11	10	9	4	7	11
	16	13	7	10	9	9	4	11	10	9	4	7	11	10	9	8	3	-	-
	24	11	10	9	4	7	11	10	4	7	11	-	-	9	4	-	-	-	-
250S125-18	12	16	4f	14	2	12	9	13	4f	12	4	11	2	11	7f	11	3	10	2
	16	14	2f	12	10	11	7	11	7f	11	3	10	2	10	0f	10	0f	9	0
	24	11	7f	11	3	10	2	9	5f	9	5f	8	6	8	2f	8	2f	-	-
250S125-30	12	18	5	15	10	14	1	16	1	13	10	12	4	14	7	12	7	11	2
	16	16	9	14	5	12	10	14	7	12	7	11	2	13	3	11	5	10	2
	24	14	7	12	7	11	2	12	9	11	0	9	9	11	7	10	0	8	8
250S125-33	12	19	8	15	8	13	8	17	3	13	8	11	11	15	8	12	5	10	10
	16	17	11	14	3	12	5	15	8	12	5	10	10	14	3	11	3	9	10
	24	15	8	12	5	10	10	13	8	10	10	9	5	12	4	9	10	8	4
350S125-18	12	18	3f	16	4	14	4	14	11f	14	4	12	6	12	11f	12	11f	11	4
	16	15	10f	14	10	13	0	12	11f	12	11f	11	4	11	2f	11	2f	10	3
	24	12	11f	12	11f	11	4	10	7f	10	7f	9	11	9	2f	9	2f	9	0
350S125-30	12	22	6	17	11	15	8	19	8	15	8	13	8	17	11	14	2	12	4
	16	20	6	16	3	14	2	17	11	14	2	12	4	16	3	12	11	11	1
	24	17	11	14	2	12	4	15	8	12	4	10	7	13	9f	11	1	-	-
350S125-33	12	23	0	18	3	15	11	20	1	15	11	13	11	18	3	14	6	12	8
	16	20	11	16	7	14	6	18	3	14	6	12	8	16	7	13	2	11	4
	24	18	3	14	6	12	8	15	11	12	8	10	10	14	4f	11	4	9	8
362S125-18	12	18	8f	16	8	14	7	15	3f	14	7	12	9	13	2f	13	2f	11	6
	16	16	2f	15	2	13	3	13	2f	13	2f	11	6	11	5f	11	5f	10	4
	24	13	2f	13	2f	11	6	10	9f	10	9f	9	11	9	4f	9	4f	8	11
362S125-30	12	22	10	18	3	16	4	19	11	16	0	14	3	18	1	14	6	12	11
	16	20	8	16	7	14	10	18	1	14	6	12	11	16	5	13	2	11	6
	24	18	1	14	6	12	11	15	9f	12	8	10	11	13	8f	11	4	-	-
362S125-33	12	24	2	19	2	16	9	21	1	16	9	14	8	19	2	15	3	13	4
	16	21	11	17	5	15	3	19	2	15	3	13	4	17	5	13	10	11	11
	24	19	2	15	3	13	4	16	8f	13	4	11	4	14	5f	11	11	10	1
400S125-18	12	19	3f	17	6	15	4	15	9f	15	4	13	4	13	8f	13	8f	12	2
	16	16	8f	15	11	13	11	13	8f	13	8f	12	2	11	10f	11	10f	11	0
	24	13	8f	13	8f	12	2	11	2f	11	2f	10	7	9	8f	9	8f	9	7
400S125-30	12	24	6	19	5	17	0	21	5	17	0	14	10	19	5	15	5	13	6
	16	22	3	17	8	15	5	19	5	15	5	13	6	17	5f	14	0	12	2
	24	19	5	15	5	13	6	16	5f	13	6	11	7	14	2f	12	2	10	4
400S125-33	12	25	3	20	1	17	6	22	1	17	6	15	4	20	1	15	11	13	11
	16	22	11	18	3	15	11	20	1	15	11	13	11	18	3	14	5	12	7
	24	20	1	15	11	13	11	17	3f	13	11	12	0	15	0f	12	7	10	9
550S125-18	12	21	11f	21	11f	19	6	17	10f	17	10f	17	0	15	6f	15	6f	15	6f
	16	19	0f	19	0f	17	9	15	6f	15	6f	15	6f	13	5f	13	5f	13	5f
	24	15	6f	15	6f	15	6f	12	8f	12	8f	12	8f	-	-	-	-	-	-
550S125-30	12	30	5	24	10	22	0	27	0	22	0	19	5	24	10	20	2	17	10
	16	28	0	22	9	20	2	24	10f	20	2	17	10	21	7f	18	6	16	2
	24	24	10	20	2	17	10	20	4f	17	10	15	7	17	7f	16	2	-	-
600S125-18	12	23	2f	22	9	19	11	18	11f	18	11f	17	5	16	4f	16	4f	15	10
	16	20	1f	20	1f	18	1	16	4f	16	4f	15	10	14	2f	14	2f	14	2f
	24	16	4f	16	4f	15	10	13	4f	13	4f	13	4f	-	-	-	-	-	-
600S125-30	12	34	2	27	1	23	8	28	11f	23	8	20	8	25	0f	21	6	18	9
	16	30	8f	24	7	21	6	25	0f	21	6	18	9	21	8f	19	6	17	1
	24	25	0f	21	6	18	9	20	5f	18	9	16	5	17	8f	17	1	-	-
600S125-33	12	35	4	28	1	24	6	30	10	24	6	21	5	27	10f	22	3	19	5
	16	32	1f	25	6	22	3	27	10f	22	3	19	5	24	1f	20	3	17	8
	24	27	10f	22	3	19	5	22	9f	19	5	16	11	19	8f	17	8	-	-

1. Allowable composite limiting heights are calculated for the tabulated loads and deflections in accordance with ICC-ES AC86-2012.

2. The gypsum board shall be applied full height to each stud flange and installed using minimum No. 6 Type S Drywall screws spaced a maximum of 12 inches on-center for studs at 24-inch spacing, and 16 inches on-center for studs at 16- and 12-inch spacing. Vertical orientation of the GWB is required.

3. No fasteners are required for attaching the stud to the track.

4. Stud end bearing shall be a minimum of 1 inch.

5. 'f' adjacent to the height value indicates that flexural stress controls the allowable wall height

Table 4: SFS Web Crippling Strength (lbs)

Section	Design Thickness (in)	Condition 1	Condition 2	Condition 3	Condition 4
		Bearing Length (in)			
		1	3.5	1	3.5
162SFS-D25[4] (50)	0.0155	57	109	44	149
162SFS-D25[4] (57)	0.0155	65	124	51	170
162SFS-D20[4] & 162SFS125-D20[4]	0.0188	95	194	78	255
162SFS125-30EQD[4] & 162SFS-30EQD[4]	0.0235	147	319	128	406
250SFS-D25[4] (50)	0.0155	53	106	34	132
250SFS-D25[4] (57)	0.0155	60	121	39	150
250SFS-D20 & 250SFS125-D20	0.0188	90	211	63	250
250SFS125-30EQD & 250SFS-30EQD	0.0235	140	345	108	401
250SFS162-33EQS	0.0295	219	561	181	645
250SFS162-43EQS[2]	0.0400	396	1063	356	1210
350SFS-D20 & 350SFS125-D20	0.0188	85	206	49	224
350SFS125-30EQD & 350SFS-30EQD	0.0235	133	338	88	366
350SFS162-33EQS	0.0295	209	550	155	597
350SFS162-43EQS[2]	0.0400	382	1046	316	1136
362SFS-D20 & 362SFS125-D20	0.0188	84	205	47	221
362SFS125-30EQD & 362SFS-30EQD	0.0235	132	337	86	362
362SFS162-33EQS	0.0295	208	549	152	592
362SFS162-43EQS[2]	0.0400	380	1044	311	1128
400SFS-D20 & 400SFS125-D20	0.0188	82	203	43	212
400SFS125-30EQ & 400SFS-30EQD	0.0235	130	334	80	351
400SFS162-33EQS	0.0295	205	546	143	576
400SFS162-43EQS[2]	0.0400	376	1039	298	1103
550SFS125-30EQD[1] & 550SFS-30EQD[1]	0.0235	122	326	57	309
550SFS162-33EQS	0.0295	194	533	112	519
550SFS162-43EQS[2]	0.0400	359	1018	251	1017
600SFS125-30EQD[1] & 600SFS-30EQD[1]	0.0235	120	323	50	297
600SFS162-33EQS	0.0295	191	529	103	502
600SFS162-43EQS	0.0400	354	1012	236	991
800SFS162-43EQS[2]	0.0400	336	990	185	897

1. *Web depth-to-thickness ratio exceeds 200. However, confirmatory testing has shown that the AISI S100 equations conservatively predict web crippling capacities for this member.*
2. *SFS200-43EQS values are equal to SFS162-43EQS.*
3. *The values in this table are based on members fastened to supports.*
4. *All 162SFS and 250SFS-D25 values are based on an interior bearing length of 2.5 inch.*
5. *Punchouts and holes in member webs shall be located away from bearing locations as required by AISI S100 section C3.4.2 or the allowable bearing capacity shall be reduced in accordance with AISI S100 section C3.4.2. Table 4a of this report provides the minimum end distance to achieve full web crippling capacity for members with punchouts and holes.*

Table 4a: Minimum End Distance to Achieve Full Web Crippling Capacity for End-One-Flange-Bearing (EOF) Condition using AISI S100 Equation C3.4.2-1 for Non-Axial-Load-Bearing Members

Depth	d_h	15mil		18mil		22mil		28mil		38mil		43mil		54mil		68mil		97mil		118mil	
(in)	(in)	h (in)	x (in)	h (in)	x (in)	h (in)	x (in)	h (in)	x (in)	h (in)	x (in)	h (in)	x (in)	h (in)	x (in)	h (in)	x (in)	h (in)	x (in)	h (in)	x (in)
1.625	0.75	1.42	2.77	1.42	2.77	1.41	2.77	-	-	-	-	-	-	-	-	-	-	-	-	-	-
2.5	0.75	2.30	2.66	2.29	2.66	2.29	2.66	2.28	2.66	2.28	2.66	2.27	2.66	2.22	2.67	2.14	2.68	1.99	2.70	1.88	2.71
3.5	1.5	3.30	5.48	3.29	5.48	3.29	5.48	3.28	5.48	3.28	5.48	3.27	5.48	3.22	5.49	3.14	5.49	2.99	5.51	2.88	5.53
3.625	1.5	3.42	5.46	3.42	5.46	3.41	5.46	3.41	5.46	3.40	5.46	3.39	5.46	3.34	5.47	3.27	5.48	3.12	5.50	3.01	5.51
4	1.5	3.80	5.42	3.79	5.42	3.79	5.42	3.78	5.42	3.78	5.42	3.77	5.42	3.72	5.43	3.64	5.43	3.49	5.45	3.38	5.47
5.5	1.5	-	-	-	-	5.29	5.24	5.28	5.24	5.28	5.24	5.27	5.24	5.22	5.24	5.14	5.25	4.99	5.27	4.88	5.29
6	1.5	-	-	5.79	5.18	5.79	5.18	5.78	5.18	5.78	5.18	5.77	5.18	5.72	5.18	5.64	5.19	5.49	5.21	5.38	5.23

1. *The value of x is taken from AISI S100 equation C3.4.2.1 for $R^c = 1.0 = 1.01-0.325d^h/h+0.083x/h$ using the listed values for d^h and h.*
2. *Distance h is the flat web height, which equals the nominal height - 2(thickness + inside radius).*
3. *x= minimum distance between web hole and edge of bearing.*

Table 5: "S" Shape C-Stud and C-Joist Section Properties

Section	Design Thickness	Fy	Gross Properties						Effective Properties					Torsional Properties						L_u
			Area	Weight	I_{xx}	R_x	I_{yy}	R_y	I_{xxe}	S_{xxe}	$M_{a\text{-}L}$	$M_{a\text{-}D}$	V_{ag}	Jx1000	C_w	X_o	m	R_o	ß	
	(in)	(ksi)	(in²)	(lb/ft)	(in⁴)	(in)	(in⁴)	(in)	(in⁴)	(in³)	(in-k)	(in-k)	(lb)	(in⁴)	(in⁶)	(in)	(in)	(in)		(in)
162S125-18	0.0188	33	0.080	0.27	0.038	0.686	0.016	0.447	0.034	0.031	0.61	0.65	302	0.009	0.009	-1.029	0.594	1.315	0.388	29.0
162S125-27	0.0283	33	0.120	0.41	0.056	0.682	0.023	0.443	0.055	0.053	1.05	1.14	494	0.032	0.013	-1.017	0.587	1.302	0.390	29.1
162S125-30	0.0312	33	0.131	0.45	0.061	0.681	0.026	0.441	0.060	0.060	1.19	1.29	543	0.043	0.014	-1.014	0.585	1.298	0.390	29.2
162S125-33	0.0346	33	0.145	0.49	0.067	0.679	0.028	0.440	0.066	0.069	1.37	1.48	601	0.058	0.016	-1.010	0.583	1.294	0.391	29.2
250S125-18	0.0188	33	0.097	0.33	0.099	1.014	0.019	0.439	0.089	0.059	1.17	1.03	258	0.011	0.023	-0.904	0.543	1.427	0.599	29.0
250S125-27	0.0283	33	0.144	0.49	0.147	1.009	0.027	0.434	0.144	0.097	1.92	1.83	685	0.039	0.034	-0.893	0.536	1.416	0.602	28.9
250S125-30	0.0312	33	0.159	0.54	0.161	1.008	0.030	0.433	0.159	0.110	2.17	2.09	832	0.052	0.037	-0.889	0.534	1.412	0.603	28.9
250S125-33	0.0346	33	0.176	0.60	0.178	1.006	0.033	0.431	0.175	0.125	2.48	2.41	975	0.070	0.040	-0.885	0.532	1.408	0.605	28.9
250S125-43	0.0451	33	0.227	0.77	0.228	1.001	0.041	0.426	0.225	0.177	3.49	3.43	1265	0.154	0.050	-0.873	0.525	1.396	0.608	28.9
250S125-54	0.0566	33	0.280	0.95	0.277	0.994	0.049	0.419	0.277	0.218	4.98*	5.07	1553	0.299	0.060	-0.859	0.518	1.379	0.612	26.8
250S125-54	0.0566	50	0.280	0.95	0.277	0.994	0.049	0.419	0.274	0.209	6.25	6.17	2353	0.299	0.060	-0.859	0.518	1.379	0.612	23.3
250S125-54	0.0566	57	0.280	0.95	0.277	0.994	0.049	0.419	0.274	0.202	6.90	6.75	2682	0.299	0.060	-0.859	0.518	1.379	0.612	21.7
250S125-68	0.0713	33	0.345	1.18	0.334	0.984	0.057	0.408	0.334	0.266	6.30*	6.32	1891	0.585	0.072	-0.839	0.508	1.356	0.617	26.5
250S125-68	0.0713	50	0.345	1.18	0.334	0.984	0.057	0.408	0.334	0.262	7.84	8.01	2866	0.585	0.072	-0.839	0.508	1.356	0.617	23.3
250S125-68	0.0713	57	0.345	1.18	0.334	0.984	0.057	0.408	0.334	0.254	8.69	9.05	3267	0.585	0.072	-0.839	0.508	1.356	0.617	21.7
250S137-33	0.0346	33	0.197	0.67	0.203	1.015	0.052	0.515	0.203	0.158	3.11	3.10	975	0.079	0.076	-1.141	0.677	1.612	0.499	35.6
250S137-43	0.0451	33	0.255	0.87	0.261	1.010	0.067	0.511	0.261	0.205	4.53*	4.60	1265	0.173	0.096	-1.129	0.670	1.599	0.501	33.6
250S137-54	0.0566	33	0.316	1.07	0.318	1.004	0.080	0.504	0.318	0.255	5.76*	5.75	1553	0.337	0.115	-1.115	0.663	1.583	0.504	33.4
250S137-54	0.0566	50	0.316	1.07	0.318	1.004	0.080	0.504	0.318	0.244	8.22*	8.34	2353	0.337	0.115	-1.115	0.663	1.583	0.504	27.1
250S137-54	0.0566	57	0.316	1.07	0.318	1.004	0.080	0.504	0.318	0.244	8.32	8.42	2682	0.337	0.115	-1.115	0.663	1.583	0.504	26.9
250S137-68	0.0713	33	0.390	1.33	0.386	0.994	0.095	0.495	0.386	0.309	7.19*	7.19	1891	0.661	0.138	-1.096	0.653	1.561	0.507	33.1
250S137-68	0.0713	50	0.390	1.33	0.386	0.994	0.095	0.495	0.386	0.308	10.65*	10.67	2866	0.661	0.138	-1.096	0.653	1.561	0.507	26.8
250S137-68	0.0713	57	0.390	1.33	0.386	0.994	0.095	0.495	0.386	0.309	10.53	10.53	3267	0.661	0.138	-1.096	0.653	1.561	0.507	27.0
250S162-33	0.0346	33	0.223	0.76	0.235	1.027	0.087	0.624	0.235	0.180	3.55	3.56	975	0.089	0.146	-1.470	0.859	1.898	0.401	44.1
250S162-43	0.0451	33	0.289	0.98	0.302	1.022	0.111	0.620	0.302	0.240	5.22*	5.25	1265	0.196	0.184	-1.457	0.852	1.885	0.402	42.1
250S162-54	0.0566	33	0.358	1.22	0.370	1.016	0.135	0.613	0.370	0.296	6.57*	6.57	1553	0.383	0.223	-1.443	0.845	1.868	0.403	41.8
250S162-54	0.0566	50	0.358	1.22	0.370	1.016	0.135	0.613	0.370	0.284	9.42*	9.46	2353	0.383	0.223	-1.443	0.845	1.868	0.403	33.9
250S162-54	0.0566	57	0.358	1.22	0.370	1.016	0.135	0.613	0.370	0.283	9.66	9.67	2682	0.383	0.223	-1.443	0.845	1.868	0.403	33.4
250S162-68	0.0713	33	0.443	1.51	0.450	1.007	0.162	0.605	0.450	0.360	8.21*	8.21	1891	0.752	0.268	-1.424	0.835	1.846	0.405	41.7
250S162-68	0.0713	50	0.443	1.51	0.450	1.007	0.162	0.605	0.450	0.357	12.11*	12.21	2866	0.752	0.268	-1.424	0.835	1.846	0.405	33.7
250S162-68	0.0713	57	0.443	1.51	0.450	1.007	0.162	0.605	0.450	0.357	12.17	12.29	3267	0.752	0.268	-1.424	0.835	1.846	0.405	33.6
350S125-18	0.0188	33	0.115	0.39	0.215	1.366	0.021	0.423	0.203	0.072	1.42	1.47	180	0.014	0.050	-0.797	0.495	1.637	0.763	28.8
350S125-27	0.0283	33	0.173	0.59	0.320	1.361	0.030	0.418	0.315	0.130	2.57	2.65	614	0.046	0.072	-0.787	0.489	1.627	0.766	28.7
350S125-30	0.0312	33	0.190	0.65	0.351	1.359	0.033	0.417	0.346	0.150	2.96	3.04	824	0.062	0.079	-0.784	0.487	1.624	0.767	28.6
350S125-33	0.0346	33	0.210	0.72	0.387	1.358	0.036	0.415	0.382	0.175	3.45	3.53	1024	0.084	0.087	-0.780	0.485	1.620	0.768	28.6
350S125-43	0.0451	33	0.272	0.93	0.498	1.352	0.046	0.410	0.495	0.258	5.10	5.11	1739	0.184	0.109	-0.769	0.479	1.609	0.771	28.4
350S125-54	0.0566	33	0.337	1.15	0.608	1.344	0.055	0.402	0.608	0.328	6.49	6.87	2253	0.360	0.131	-0.755	0.471	1.593	0.775	28.4
350S125-54	0.0566	50	0.337	1.15	0.608	1.344	0.055	0.402	0.604	0.308	9.22	9.25	3372	0.360	0.131	-0.755	0.471	1.593	0.775	22.9
350S125-54	0.0566	57	0.337	1.15	0.608	1.344	0.055	0.402	0.603	0.295	10.08	10.11	3600	0.360	0.131	-0.755	0.471	1.593	0.775	21.4
350S125-68	0.0713	33	0.417	1.42	0.739	1.332	0.064	0.391	0.737	0.409	9.67*	9.98	2774	0.706	0.156	-0.737	0.462	1.571	0.780	25.7
350S125-68	0.0713	50	0.417	1.42	0.739	1.332	0.064	0.391	0.737	0.400	11.97	12.54	4202	0.706	0.156	-0.737	0.462	1.571	0.780	22.8
350S125-68	0.0713	57	0.417	1.42	0.739	1.332	0.064	0.391	0.737	0.387	13.19	13.79	4791	0.706	0.156	-0.737	0.462	1.571	0.780	21.3
350S162-33	0.0346	33	0.258	0.88	0.508	1.404	0.098	0.617	0.508	0.257	5.08	5.22	1024	0.103	0.277	-1.324	0.796	2.026	0.573	42.7
350S162-43	0.0451	33	0.334	1.14	0.654	1.400	0.125	0.612	0.654	0.357	7.05	7.31	1739	0.227	0.350	-1.312	0.789	2.014	0.575	42.6
350S162-54	0.0566	33	0.415	1.41	0.804	1.392	0.152	0.606	0.804	0.447	8.83	9.08	2253	0.443	0.426	-1.298	0.782	1.998	0.578	42.7
350S162-54	0.0566	50	0.415	1.41	0.804	1.392	0.152	0.606	0.804	0.426	12.74	13.05	3372	0.443	0.426	-1.298	0.782	1.998	0.578	34.5
350S162-54	0.0566	57	0.415	1.41	0.804	1.392	0.152	0.606	0.804	0.414	14.14	14.30	3600	0.443	0.426	-1.298	0.782	1.998	0.578	32.2
350S162-68	0.0713	33	0.515	1.75	0.985	1.383	0.184	0.597	0.985	0.551	12.56*	12.83	2774	0.872	0.514	-1.280	0.772	1.977	0.581	39.7
350S162-68	0.0713	50	0.515	1.75	0.985	1.383	0.184	0.597	0.985	0.549	16.44	16.84	4202	0.872	0.514	-1.280	0.772	1.977	0.581	34.5
350S162-68	0.0713	57	0.515	1.75	0.985	1.383	0.184	0.597	0.985	0.540	18.44	18.95	4791	0.872	0.514	-1.280	0.772	1.977	0.581	32.2
350S300-54	0.0566	33	0.585	1.99	1.286	1.483	0.724	1.113	1.279	0.582	11.51	12.73	2253	0.624	2.166	-2.682	1.531	3.261	0.323	74.7
350S300-54	0.0566	50	0.585	1.99	1.286	1.483	0.724	1.113	1.213	0.508	15.20	16.71	3372	0.624	2.166	-2.682	1.531	3.261	0.323	60.4
350S300-54	0.0566	57	0.585	1.99	1.286	1.483	0.724	1.113	1.193	0.485	16.56	18.15	3600	0.624	2.166	-2.682	1.531	3.261	0.323	56.5
350S300-68	0.0713	33	0.729	2.48	1.586	1.475	0.888	1.104	1.586	0.775	15.31	16.98	2774	1.235	2.649	-2.663	1.521	3.238	0.324	75.1
350S300-68	0.0713	50	0.729	2.48	1.586	1.475	0.888	1.104	1.557	0.687	20.56	22.54	4202	1.235	2.649	-2.663	1.521	3.238	0.324	60.5
350S300-68	0.0713	57	0.729	2.48	1.586	1.475	0.888	1.104	1.542	0.660	22.51	24.56	4791	1.235	2.649	-2.663	1.521	3.238	0.324	56.6
362S125-18	0.0188	33	0.118	0.40	0.234	1.409	0.021	0.421	0.221	0.075	1.48	1.52	173	0.014	0.054	-0.786	0.490	1.667	0.778	28.8
362S125-27	0.0283	33	0.176	0.60	0.347	1.404	0.031	0.416	0.342	0.135	2.67	2.75	592	0.047	0.079	-0.776	0.484	1.657	0.781	28.6
362S125-30	0.0312	33	0.194	0.66	0.381	1.402	0.033	0.415	0.376	0.156	3.08	3.17	794	0.063	0.086	-0.773	0.482	1.654	0.782	28.6
362S125-33	0.0346	33	0.215	0.73	0.421	1.400	0.037	0.413	0.415	0.182	3.59	3.67	1024	0.086	0.094	-0.769	0.480	1.650	0.783	28.5
362S125-43	0.0451	33	0.278	0.95	0.540	1.395	0.046	0.408	0.537	0.269	5.31	5.33	1739	0.188	0.118	-0.758	0.473	1.639	0.786	28.4
362S125-54	0.0566	33	0.344	1.17	0.661	1.386	0.055	0.400	0.661	0.343	6.78	7.19	2341	0.367	0.142	-0.744	0.466	1.623	0.790	28.3
362S125-54	0.0566	50	0.344	1.17	0.661	1.386	0.055	0.400	0.656	0.321	9.62	9.65	3372	0.367	0.142	-0.744	0.466	1.623	0.790	22.8
362S125-54	0.0566	57	0.344	1.17	0.661	1.386	0.055	0.400	0.655	0.308	10.52	10.54	3600	0.367	0.142	-0.744	0.466	1.623	0.790	21.4
362S125-68	0.0713	33	0.426	1.45	0.803	1.374	0.065	0.389	0.802	0.430	8.51	8.76	2884	0.721	0.169	-0.726	0.457	1.602	0.795	28.2
362S125-68	0.0713	50	0.426	1.45	0.803	1.374	0.065	0.389	0.802	0.418	12.52	13.11	4370	0.721	0.169	-0.726	0.457	1.602	0.795	22.7
362S125-68	0.0713	57	0.426	1.45	0.803	1.374	0.065	0.389	0.802	0.404	13.80	14.41	4981	0.721	0.169	-0.726	0.457	1.602	0.795	21.2
362S137-33	0.0346	33	0.236	0.80	0.479	1.424	0.059	0.501	0.479	0.232	4.59	4.73	1024	0.094	0.165	-1.003	0.615	1.813	0.694	34.7
362S137-43	0.0451	33	0.306	1.04	0.616	1.419	0.075	0.497	0.616	0.320	6.32	6.65	1739	0.207	0.208	-0.991	0.608	1.801	0.697	34.6
362S137-54	0.0566	33	0.379	1.29	0.756	1.411	0.091	0.490	0.756	0.402	7.94	8.24	2341	0.405	0.251	-0.978	0.601	1.785	0.700	34.6
362S137-54	0.0566	50	0.379	1.29	0.756	1.411	0.091	0.490	0.756	0.381	11.42	11.91	3372	0.405	0.251	-0.978	0.601	1.785	0.700	27.9
362S137-54	0.0566	57	0.379	1.29	0.756	1.411	0.091	0.490	0.756	0.372	12.70	13.06	3600	0.405	0.251	-0.978	0.601	1.785	0.700	26.1

1. *Web-height to thickness ratio exceeds 200. Web Stiffeners are required at all support points and concentrated loads.*
* *Allowable Moment includes cold work of forming.*

Table 5: "S" Shape C-Stud and C-Joist Section Properties (continued)

Section	Design Thickness	Fy	Gross Properties						Effective Properties					Torsional Properties						L_u
			Area	Weight	I_{xx}	R_x	I_{yy}	R_y	I_{xxe}	S_{xxe}	M_{a-L}	M_{a-D}	V_{ag}	Jx1000	C_w	X_o	m	R_o	ß	
	(in)	(ksi)	(in^2)	(lb/ft)	(in^4)	(in)	(in^4)	(in)	(in^4)	(in^3)	(in-k)	(in-k)	(lb)	(in^4)	(in^6)	(in)	(in)	(in)		(in)
362S137-68	0.0713	33	0.470	1.60	0.922	1.401	0.109	0.480	0.922	0.498	9.84	10.05	2884	0.797	0.302	-0.959	0.592	1.764	0.704	34.6
362S137-68	0.0713	50	0.470	1.60	0.922	1.401	0.109	0.480	0.922	0.493	14.77	15.24	4370	0.797	0.302	-0.959	0.592	1.764	0.704	27.8
362S137-68	0.0713	57	0.470	1.60	0.922	1.401	0.109	0.480	0.922	0.491	16.75	17.34	4981	0.797	0.302	-0.959	0.592	1.764	0.704	26.0
362S162-33	0.0346	33	0.262	0.89	0.551	1.450	0.099	0.616	0.551	0.268	5.29	5.43	1024	0.105	0.297	-1.308	0.789	2.048	0.592	42.6
362S162-43	0.0451	33	0.340	1.16	0.710	1.445	0.127	0.611	0.710	0.372	7.34	7.62	1739	0.230	0.376	-1.297	0.782	2.036	0.594	42.5
362S162-54	0.0566	33	0.422	1.44	0.873	1.438	0.154	0.604	0.873	0.466	9.22	9.51	2341	0.451	0.457	-1.283	0.774	2.020	0.597	42.5
362S162-54	0.0566	50	0.422	1.44	0.873	1.438	0.154	0.604	0.873	0.444	13.28	13.59	3372	0.451	0.457	-1.283	0.774	2.020	0.597	34.4
362S162-54	0.0566	57	0.422	1.44	0.873	1.438	0.154	0.604	0.873	0.432	14.73	14.90	3600	0.451	0.457	-1.283	0.774	2.020	0.597	32.1
362S162-68	0.0713	33	0.524	1.78	1.069	1.429	0.186	0.596	1.069	0.579	11.43	11.65	2884	0.887	0.552	-1.264	0.765	1.998	0.600	42.7
362S162-68	0.0713	50	0.524	1.78	1.069	1.429	0.186	0.596	1.069	0.574	17.18	17.65	4370	0.887	0.552	-1.264	0.765	1.998	0.600	34.3
362S162-68	0.0713	57	0.524	1.78	1.069	1.429	0.186	0.596	1.069	0.564	19.26	19.76	4981	0.887	0.552	-1.264	0.765	1.998	0.600	32.1
362S200-33	0.0346	33	0.297	1.01	0.648	1.478	0.177	0.772	0.647	0.294	5.81	6.19	1024	0.118	0.577	-1.741	1.030	2.411	0.478	53.6
362S200-43	0.0451	33	0.385	1.31	0.836	1.474	0.227	0.767	0.836	0.427	8.43	8.70	1739	0.261	0.734	-1.729	1.024	2.398	0.480	53.5
362S200-54	0.0566	33	0.479	1.63	1.030	1.467	0.277	0.761	1.030	0.553	10.93	11.23	2341	0.511	0.896	-1.715	1.016	2.382	0.482	53.6
362S200-54	0.0566	50	0.479	1.63	1.030	1.467	0.277	0.761	1.030	0.490	14.66	15.47	3372	0.511	0.896	-1.715	1.016	2.382	0.482	43.3
362S200-54	0.0566	57	0.479	1.63	1.030	1.467	0.277	0.761	1.030	0.468	15.97	16.92	3600	0.511	0.896	-1.715	1.016	2.382	0.482	40.5
362S200-68	0.0713	33	0.595	2.02	1.265	1.458	0.337	0.753	1.265	0.687	15.29*	15.54	2884	1.008	1.089	-1.696	1.006	2.360	0.484	50.6
362S200-68	0.0713	50	0.595	2.02	1.265	1.458	0.337	0.753	1.265	0.666	19.95	20.51	4370	1.008	1.089	-1.696	1.006	2.360	0.484	43.3
362S200-68	0.0713	57	0.595	2.02	1.265	1.458	0.337	0.753	1.265	0.649	22.17	22.54	4981	1.008	1.089	-1.696	1.006	2.360	0.484	40.5
362S300-54	0.0566	33	0.592	2.01	1.390	1.533	0.734	1.114	1.383	0.607	11.99	13.22	2341	0.632	2.316	-2.659	1.522	3.265	0.337	74.5
362S300-54	0.0566	50	0.592	2.01	1.390	1.533	0.734	1.114	1.312	0.529	15.83	17.34	3372	0.632	2.316	-2.659	1.522	3.265	0.337	60.2
362S300-54	0.0566	57	0.592	2.01	1.390	1.533	0.734	1.114	1.291	0.505	17.24	18.83	3600	0.632	2.316	-2.659	1.522	3.265	0.337	56.4
362S300-68	0.0713	33	0.738	2.51	1.716	1.525	0.900	1.105	1.716	0.811	16.02	17.65	2884	1.250	2.833	-2.640	1.512	3.243	0.337	74.9
362S300-68	0.0713	50	0.738	2.51	1.716	1.525	0.900	1.105	1.684	0.716	21.44	23.42	4370	1.250	2.833	-2.640	1.512	3.243	0.337	60.4
362S300-68	0.0713	57	0.738	2.51	1.716	1.525	0.900	1.105	1.668	0.688	23.47	25.50	4981	1.250	2.833	-2.640	1.512	3.243	0.337	56.4
400S125-18[1]	0.0188	33	0.125	0.42	0.294	1.536	0.021	0.414	0.281	0.083	1.64	1.68	156	0.015	0.068	-0.754	0.475	1.760	0.816	28.7
400S125-27	0.0283	33	0.187	0.64	0.438	1.531	0.031	0.410	0.431	0.151	2.97	3.07	533	0.050	0.098	-0.744	0.469	1.751	0.819	28.5
400S125-30	0.0312	33	0.206	0.70	0.481	1.529	0.034	0.408	0.474	0.174	3.44	3.53	715	0.067	0.107	-0.741	0.467	1.748	0.820	28.5
400S125-33	0.0346	33	0.228	0.77	0.531	1.527	0.038	0.407	0.524	0.203	4.01	4.10	976	0.091	0.118	-0.738	0.465	1.744	0.821	28.4
400S125-43	0.0451	33	0.295	1.00	0.682	1.521	0.048	0.402	0.680	0.301	5.96	5.99	1739	0.200	0.148	-0.727	0.459	1.733	0.824	28.2
400S125-54	0.0566	33	0.365	1.24	0.835	1.512	0.057	0.394	0.835	0.387	7.65	8.12	2603	0.390	0.178	-0.713	0.451	1.718	0.828	28.1
400S125-54	0.0566	50	0.365	1.24	0.835	1.512	0.057	0.394	0.830	0.361	10.81	10.87	3372	0.390	0.178	-0.713	0.451	1.718	0.828	22.7
400S125-54	0.0566	57	0.365	1.24	0.835	1.512	0.057	0.394	0.828	0.346	11.81	11.86	3600	0.390	0.178	-0.713	0.451	1.718	0.828	21.2
400S125-68	0.0713	33	0.452	1.54	1.017	1.499	0.066	0.383	1.015	0.492	9.72	10.05	3215	0.767	0.213	-0.695	0.442	1.696	0.832	28.0
400S125-68	0.0713	50	0.452	1.54	1.017	1.499	0.066	0.383	1.015	0.474	14.18	14.84	4871	0.767	0.213	-0.695	0.442	1.696	0.832	22.5
400S125-68	0.0713	57	0.452	1.54	1.017	1.499	0.066	0.383	1.015	0.457	15.61	16.30	5553	0.767	0.213	-0.695	0.442	1.696	0.832	21.0
400S137-33	0.0346	33	0.249	0.85	0.603	1.556	0.061	0.496	0.603	0.259	5.12	5.29	976	0.099	0.204	-0.965	0.597	1.897	0.741	34.5
400S137-43	0.0451	33	0.323	1.10	0.776	1.551	0.078	0.491	0.776	0.359	7.09	7.47	1739	0.219	0.257	-0.954	0.591	1.885	0.744	34.3
400S137-54	0.0566	33	0.401	1.36	0.953	1.542	0.094	0.484	0.953	0.453	8.96	9.42	2603	0.428	0.311	-0.940	0.583	1.870	0.747	34.3
400S137-54	0.0566	50	0.401	1.36	0.953	1.542	0.094	0.484	0.953	0.428	12.82	13.38	3372	0.428	0.311	-0.940	0.583	1.870	0.747	27.7
400S137-54	0.0566	57	0.401	1.36	0.953	1.542	0.094	0.484	0.953	0.417	14.24	14.65	3600	0.428	0.311	-0.940	0.583	1.870	0.747	25.9
400S137-68	0.0713	33	0.497	1.69	1.165	1.531	0.112	0.475	1.165	0.567	11.21	11.51	3215	0.842	0.375	-0.922	0.574	1.849	0.751	34.2
400S137-68	0.0713	50	0.497	1.69	1.165	1.531	0.112	0.475	1.165	0.558	16.70	17.44	4871	0.842	0.375	-0.922	0.574	1.849	0.751	27.6
400S137-68	0.0713	57	0.497	1.69	1.165	1.531	0.112	0.475	1.165	0.554	18.92	19.55	5553	0.842	0.375	-0.922	0.574	1.849	0.751	25.8
400S162-33	0.0346	33	0.275	0.94	0.692	1.586	0.103	0.611	0.692	0.299	5.91	6.07	976	0.110	0.363	-1.263	0.768	2.118	0.644	42.3
400S162-43	0.0451	33	0.357	1.21	0.892	1.581	0.131	0.606	0.892	0.417	8.23	8.54	1739	0.242	0.460	-1.252	0.761	2.106	0.647	42.2
400S162-54	0.0566	33	0.443	1.51	1.098	1.574	0.159	0.600	1.098	0.526	10.39	10.84	2603	0.473	0.560	-1.238	0.754	2.090	0.649	42.2
400S162-54	0.0566	50	0.443	1.51	1.098	1.574	0.159	0.600	1.098	0.498	14.90	15.25	3372	0.473	0.560	-1.238	0.754	2.090	0.649	34.1
400S162-54	0.0566	57	0.443	1.51	1.098	1.574	0.159	0.600	1.098	0.483	16.50	16.69	3600	0.473	0.560	-1.238	0.754	2.090	0.649	31.9
400S162-68	0.0713	33	0.550	1.87	1.346	1.564	0.192	0.591	1.346	0.658	13.00	13.30	3215	0.933	0.677	-1.220	0.745	2.069	0.653	42.2
400S162-68	0.0713	50	0.550	1.87	1.346	1.564	0.192	0.591	1.346	0.648	19.41	20.15	4871	0.933	0.677	-1.220	0.745	2.069	0.653	34.0
400S162-68	0.0713	57	0.550	1.87	1.346	1.564	0.192	0.591	1.346	0.636	21.72	22.24	5553	0.933	0.677	-1.220	0.745	2.069	0.653	31.8
400S200-33	0.0346	33	0.310	1.05	0.812	1.619	0.183	0.769	0.812	0.328	6.49	6.90	976	0.124	0.697	-1.688	1.007	2.462	0.530	53.1
400S200-43	0.0451	33	0.402	1.37	1.047	1.615	0.235	0.764	1.047	0.478	9.45	9.74	1739	0.272	0.886	-1.676	1.000	2.449	0.532	53.0
400S200-54	0.0566	33	0.500	1.70	1.292	1.608	0.287	0.758	1.292	0.623	12.30	12.77	2603	0.534	1.083	-1.662	0.993	2.433	0.534	53.0
400S200-54	0.0566	50	0.500	1.70	1.292	1.608	0.287	0.758	1.292	0.549	16.43	17.31	3372	0.534	1.083	-1.662	0.993	2.433	0.534	42.9
400S200-54	0.0566	57	0.500	1.70	1.292	1.608	0.287	0.758	1.292	0.524	17.88	18.92	3600	0.534	1.083	-1.662	0.993	2.433	0.534	40.1
400S200-68	0.0713	33	0.622	2.12	1.589	1.599	0.349	0.750	1.589	0.780	15.40	15.70	3215	1.054	1.318	-1.643	0.983	2.412	0.536	53.2
400S200-68	0.0713	50	0.622	2.12	1.589	1.599	0.349	0.750	1.589	0.751	22.48	23.04	4871	1.054	1.318	-1.643	0.983	2.412	0.536	42.9
400S200-68	0.0713	57	0.622	2.12	1.589	1.599	0.349	0.750	1.589	0.731	24.94	25.29	5553	1.054	1.318	-1.643	0.983	2.412	0.536	40.1
400S300-54	0.0566	33	0.613	2.09	1.732	1.681	0.760	1.114	1.723	0.680	13.44	14.70	2603	0.655	2.802	-2.594	1.496	3.285	0.377	74.0
400S300-54	0.0566	50	0.613	2.09	1.732	1.681	0.760	1.114	1.637	0.592	17.72	19.25	3372	0.655	2.802	-2.594	1.496	3.285	0.377	59.9
400S300-54	0.0566	57	0.613	2.09	1.732	1.681	0.760	1.114	1.612	0.565	19.29	20.88	3600	0.655	2.802	-2.594	1.496	3.285	0.377	56.1
400S300-68	0.0713	33	0.764	2.60	2.139	1.673	0.933	1.105	2.139	0.914	18.06	19.68	3215	1.295	3.432	-2.574	1.486	3.263	0.378	74.3
400S300-68	0.0713	50	0.764	2.60	2.139	1.673	0.933	1.105	2.099	0.805	24.09	26.05	4871	1.295	3.432	-2.574	1.486	3.263	0.378	60.0
400S300-68	0.0713	57	0.764	2.60	2.139	1.673	0.933	1.105	2.082	0.772	26.36	28.36	5553	1.295	3.432	-2.574	1.486	3.263	0.378	56.1
550S125-18[1]	0.0188	33	0.153	0.52	0.630	2.029	0.023	0.390	-	-	-	-	-	0.018	0.140	-0.651	0.423	2.166	0.910	22.9
550S125-27	0.0283	33	0.229	0.78	0.938	2.023	0.034	0.385	0.898	0.246	4.86	4.26	382	0.061	0.205	-0.641	0.417	2.157	0.912	27.9
550S125-30	0.0312	33	0.252	0.86	1.031	2.021	0.037	0.384	0.996	0.286	5.65	4.95	512	0.082	0.224	-0.639	0.415	2.154	0.912	27.9
550S125-33	0.0346	33	0.279	0.95	1.139	2.019	0.041	0.382	1.111	0.335	6.62	5.78	699	0.112	0.246	-0.635	0.413	2.151	0.913	27.8
550S125-43	0.0451	33	0.362	1.23	1.468	2.013	0.052	0.377	1.458	0.500	9.88	8.61	1550	0.246	0.309	-0.625	0.407	2.141	0.915	27.6
550S125-54	0.0566	33	0.450	1.53	1.805	2.002	0.061	0.369	1.805	0.647	12.79	11.92	2739	0.481	0.374	-0.613	0.401	2.126	0.917	27.3
550S125-54	0.0566	50	0.450	1.53	1.805	2.002	0.061	0.369	1.791	0.606	18.13	15.75	3093	0.481	0.374	-0.613	0.401	2.126	0.917	22.1

1. *Web-height to thickness ratio exceeds 200. Web Stiffeners are required at all support points and concentrated loads.*
* *Allowable Moment includes cold work of forming.*

Table 5: "S" Shape C-Stud and C-Joist Section Properties (continued)

Section	Design Thickness	Fy	Gross Properties						Effective Properties					Torsional Properties						L_u
			Area	Weight	I_{xx}	R_x	I_{yy}	R_y	I_{xxe}	S_{xxe}	$M_{a\text{-}L}$	$M_{a\text{-}D}$	V_{ag}	Jx1000	C_w	X_o	m	R_o	ß	
	(in)	(ksi)	(in²)	(lb/ft)	(in⁴)	(in)	(in⁴)	(in)	(in⁴)	(in³)	(in-k)	(in-k)	(lb)	(in⁴)	(in⁶)	(in)	(in)	(in)		(in)
550S125-54	0.0566	57	0.450	1.53	1.805	2.002	0.061	0.369	1.789	0.582	19.86	17.14	3093	0.481	0.374	-0.613	0.401	2.126	0.917	20.7
550S125-68	0.0713	33	0.559	1.90	2.209	1.987	0.072	0.358	2.205	0.801	18.94*	18.59	4347	0.948	0.448	-0.597	0.392	2.106	0.920	24.6
550S125-68	0.0713	50	0.559	1.90	2.209	1.987	0.072	0.358	2.205	0.791	23.68	21.98	5350	0.948	0.448	-0.597	0.392	2.106	0.920	21.8
550S125-68	0.0713	57	0.559	1.90	2.209	1.987	0.072	0.358	2.205	0.776	26.47	24.04	5713	0.948	0.448	-0.597	0.392	2.106	0.920	20.4
550S162-33	0.0346	33	0.327	1.11	1.458	2.112	0.113	0.589	1.458	0.512	10.11	8.63	699	0.130	0.713	-1.114	0.697	2.459	0.795	41.4
550S162-43	0.0451	33	0.424	1.44	1.883	2.107	0.145	0.584	1.883	0.681	14.79*	13.14	1550	0.288	0.905	-1.103	0.691	2.448	0.797	39.2
550S162-54	0.0566	33	0.528	1.80	2.324	2.098	0.176	0.577	2.324	0.845	18.76*	17.87	2739	0.564	1.105	-1.090	0.684	2.434	0.800	38.7
550S162-54	0.0566	50	0.528	1.80	2.324	2.098	0.176	0.577	2.324	0.811	26.86*	23.52	3093	0.564	1.105	-1.090	0.684	2.434	0.800	31.6
550S162-54	0.0566	57	0.528	1.80	2.324	2.098	0.176	0.577	2.324	0.808	27.57	23.99	3093	0.564	1.105	-1.090	0.684	2.434	0.800	31.1
550S162-68	0.0713	33	0.657	2.24	2.861	2.086	0.212	0.568	2.861	1.040	23.72*	23.72	4347	1.114	1.342	-1.072	0.675	2.414	0.803	38.0
550S162-68	0.0713	50	0.657	2.24	2.861	2.086	0.212	0.568	2.861	1.031	34.94*	32.28	5350	1.114	1.342	-1.072	0.675	2.414	0.803	31.1
550S162-68	0.0713	57	0.657	2.24	2.861	2.086	0.212	0.568	2.861	1.029	35.13	32.43	5713	1.114	1.342	-1.072	0.675	2.414	0.803	30.9
550S300-54	0.0566	33	0.698	2.37	3.545	2.254	0.850	1.104	3.505	1.080	21.34	20.74	2739	0.745	5.364	-2.365	1.401	3.449	0.530	73.0
550S300-54	0.0566	50	0.698	2.37	3.545	2.254	0.850	1.104	3.295	0.983	29.44	26.99	3093	0.745	5.364	-2.365	1.401	3.449	0.530	59.2
550S300-54	0.0566	57	0.698	2.37	3.545	2.254	0.850	1.104	3.237	0.955	32.59	29.25	3093	0.745	5.364	-2.365	1.401	3.449	0.530	55.4
550S300-68	0.0713	33	0.871	2.96	4.391	2.245	1.044	1.095	4.384	1.411	27.88	28.03	4347	1.476	6.594	-2.346	1.391	3.427	0.531	73.1
550S300-68	0.0713	50	0.871	2.96	4.391	2.245	1.044	1.095	4.285	1.287	38.53	36.85	5350	1.476	6.594	-2.346	1.391	3.427	0.531	59.1
550S300-68	0.0713	57	0.871	2.96	4.391	2.245	1.044	1.095	4.172	1.251	42.71	40.03	5713	1.476	6.594	-2.346	1.391	3.427	0.531	55.3
600S125-18[1]	0.0188	33	0.162	0.55	0.778	2.189	0.024	0.382	-	-	-	-	-	0.019	0.172	-0.623	0.408	2.308	0.927	22.7
600S125-27[1]	0.0283	33	0.243	0.83	1.160	2.183	0.035	0.377	1.097	0.271	5.35	4.63	349	0.065	0.251	-0.614	0.402	2.299	0.929	27.7
600S125-30	0.0312	33	0.268	0.91	1.275	2.181	0.038	0.376	1.218	0.315	6.22	5.39	468	0.087	0.274	-0.611	0.401	2.296	0.929	27.6
600S125-33	0.0346	33	0.297	1.01	1.409	2.179	0.042	0.374	1.361	0.369	7.30	6.32	638	0.118	0.300	-0.608	0.399	2.293	0.930	27.6
600S125-43	0.0451	33	0.385	1.31	1.817	2.173	0.053	0.369	1.807	0.555	10.96	9.46	1416	0.261	0.378	-0.598	0.393	2.284	0.931	27.3
600S125-54	0.0566	33	0.479	1.63	2.236	2.161	0.063	0.362	2.236	0.727	14.37	13.18	2739	0.511	0.457	-0.586	0.386	2.269	0.933	27.1
600S125-54	0.0566	50	0.479	1.63	2.236	2.161	0.063	0.362	2.220	0.673	20.15	17.34	2823	0.511	0.457	-0.586	0.386	2.269	0.933	21.9
600S125-54	0.0566	57	0.479	1.63	2.236	2.161	0.063	0.362	2.216	0.645	22.03	18.85	2823	0.511	0.457	-0.586	0.386	2.269	0.933	20.5
600S125-68	0.0713	33	0.595	2.02	2.740	2.146	0.073	0.351	2.735	0.911	21.53*	20.65	4347	1.008	0.548	-0.570	0.378	2.248	0.936	24.4
600S125-68	0.0713	50	0.595	2.02	2.740	2.146	0.073	0.351	2.735	0.898	26.88	24.34	5350	1.008	0.548	-0.570	0.378	2.248	0.936	21.6
600S125-68	0.0713	57	0.595	2.02	2.740	2.146	0.073	0.351	2.735	0.869	29.64	26.59	5713	1.008	0.548	-0.570	0.378	2.248	0.936	20.2
600S137-33	0.0346	33	0.318	1.08	1.582	2.229	0.069	0.464	1.548	0.455	8.98	8.19	638	0.127	0.500	-0.807	0.519	2.416	0.889	33.5
600S137-43	0.0451	33	0.413	1.41	2.042	2.223	0.087	0.459	2.041	0.645	12.74	11.82	1416	0.280	0.633	-0.796	0.513	2.406	0.890	33.3
600S137-54	0.0566	33	0.514	1.75	2.518	2.213	0.105	0.452	2.518	0.832	16.44	15.95	2739	0.549	0.769	-0.784	0.506	2.391	0.893	33.0
600S137-54	0.0566	50	0.514	1.75	2.518	2.213	0.105	0.452	2.518	0.777	23.26	21.24	2823	0.549	0.769	-0.784	0.506	2.391	0.893	26.8
600S137-54	0.0566	57	0.514	1.75	2.518	2.213	0.105	0.452	2.515	0.754	25.75	23.15	2823	0.549	0.769	-0.784	0.506	2.391	0.893	25.1
600S137-68	0.0713	33	0.640	2.18	3.094	2.200	0.125	0.443	3.094	1.031	24.05*	24.05	4347	1.084	0.930	-0.768	0.497	2.371	0.895	30.1
600S137-68	0.0713	50	0.640	2.18	3.094	2.200	0.125	0.443	3.094	1.030	30.84	28.89	5350	1.084	0.930	-0.768	0.497	2.371	0.895	26.5
600S137-68	0.0713	57	0.640	2.18	3.094	2.200	0.125	0.443	3.094	1.019	34.78	31.65	5713	1.084	0.930	-0.768	0.497	2.371	0.895	24.8
600S137-97	0.1017	33	0.889	3.03	4.188	2.170	0.159	0.422	4.188	1.396	34.48*	34.49	6911	3.066	1.216	-0.734	0.480	2.330	0.901	28.8
600S137-97	0.1017	50	0.889	3.03	4.188	2.170	0.159	0.422	4.188	1.396	50.80*	50.80	10472	3.066	1.216	-0.734	0.480	2.330	0.901	23.6
600S137-97	0.1017	57	0.889	3.03	4.188	2.170	0.159	0.422	4.188	1.396	47.65	47.65	11622	3.066	1.216	-0.734	0.480	2.330	0.901	24.4
600S162-33	0.0346	33	0.344	1.17	1.793	2.282	0.116	0.581	1.793	0.577	11.41	9.47	638	0.137	0.861	-1.072	0.677	2.587	0.828	41.1
600S162-43	0.0451	33	0.447	1.52	2.316	2.276	0.148	0.576	2.316	0.767	16.68*	14.46	1416	0.303	1.095	-1.062	0.670	2.577	0.830	39.0
600S162-54	0.0566	33	0.556	1.89	2.860	2.267	0.180	0.570	2.860	0.953	21.17*	19.75	2739	0.594	1.337	-1.049	0.663	2.562	0.832	38.4
600S162-54	0.0566	50	0.556	1.89	2.860	2.267	0.180	0.570	2.860	0.916	30.33*	25.90	2823	0.594	1.337	-1.049	0.663	2.562	0.832	31.4
600S162-54	0.0566	57	0.556	1.89	2.860	2.267	0.180	0.570	2.860	0.912	31.13	26.41	2823	0.594	1.337	-1.049	0.663	2.562	0.832	30.9
600S162-68	0.0713	33	0.693	2.36	3.525	2.255	0.218	0.560	3.525	1.175	26.79*	26.78	4347	1.174	1.626	-1.032	0.655	2.543	0.835	37.7
600S162-68	0.0713	50	0.693	2.36	3.525	2.255	0.218	0.560	3.525	1.164	39.47*	35.69	5350	1.174	1.626	-1.032	0.655	2.543	0.835	30.8
600S162-68	0.0713	57	0.693	2.36	3.525	2.255	0.218	0.560	3.525	1.162	39.68	35.86	5713	1.174	1.626	-1.032	0.655	2.543	0.835	30.7
600S162-97	0.1017	33	0.966	3.29	4.797	2.229	0.283	0.541	4.797	1.599	38.37*	38.37	6911	3.329	2.153	-0.997	0.636	2.501	0.841	36.4
600S162-97	0.1017	50	0.966	3.29	4.797	2.229	0.283	0.541	4.797	1.599	56.73*	56.72	10472	3.329	2.153	-0.997	0.636	2.501	0.841	29.8
600S162-97	0.1017	57	0.966	3.29	4.797	2.229	0.283	0.541	4.797	1.599	54.58	54.58	11622	3.329	2.153	-0.997	0.636	2.501	0.841	30.4
600S162-118	0.1242	33	1.158	3.94	5.652	2.209	0.321	0.526	5.652	1.884	46.82*	46.82	8267	5.956	2.487	-0.971	0.623	2.470	0.845	35.6
600S162-118	0.1242	50	1.158	3.94	5.652	2.209	0.321	0.526	5.652	1.884	68.94*	68.93	12526	5.956	2.487	-0.971	0.623	2.470	0.845	29.1
600S162-118	0.1242	57	1.158	3.94	5.652	2.209	0.321	0.526	5.652	1.884	64.31	64.31	14280	5.956	2.487	-0.971	0.623	2.470	0.845	30.1
600S200-33	0.0346	33	0.379	1.29	2.075	2.340	0.209	0.743	2.058	0.621	12.28	10.77	638	0.151	1.593	-1.457	0.901	2.855	0.740	51.6
600S200-43	0.0451	33	0.492	1.67	2.683	2.335	0.268	0.739	2.683	0.873	17.24	15.39	1416	0.334	2.033	-1.446	0.894	2.844	0.742	51.4
600S200-54	0.0566	33	0.613	2.09	3.319	2.327	0.328	0.732	3.319	1.106	24.07*	22.07	2739	0.655	2.493	-1.432	0.887	2.829	0.744	48.9
600S200-54	0.0566	50	0.613	2.09	3.319	2.327	0.328	0.732	3.319	1.015	30.40	27.38	2823	0.655	2.493	-1.432	0.887	2.829	0.744	41.6
600S200-54	0.0566	57	0.613	2.09	3.319	2.327	0.328	0.732	3.319	0.987	33.67	29.82	2823	0.655	2.493	-1.432	0.887	2.829	0.744	38.9
600S200-68	0.0713	33	0.764	2.60	4.101	2.316	0.400	0.723	4.101	1.367	30.42*	29.97	4347	1.295	3.047	-1.415	0.878	2.809	0.746	48.2
600S200-68	0.0713	50	0.764	2.60	4.101	2.316	0.400	0.723	4.101	1.317	43.71*	39.69	5350	1.295	3.047	-1.415	0.878	2.809	0.746	39.3
600S200-68	0.0713	57	0.764	2.60	4.101	2.316	0.400	0.723	4.101	1.312	44.78	40.44	5713	1.295	3.047	-1.415	0.878	2.809	0.746	38.8
600S200-97	0.1017	33	1.067	3.63	5.612	2.293	0.530	0.705	5.612	1.871	43.49*	43.49	6911	3.679	4.080	-1.378	0.859	2.767	0.752	46.9
600S200-97	0.1017	50	1.067	3.63	5.612	2.293	0.530	0.705	5.612	1.871	64.53*	63.67	10472	3.679	4.080	-1.378	0.859	2.767	0.752	38.3
600S200-97	0.1017	57	1.067	3.63	5.612	2.293	0.530	0.705	5.612	1.871	63.85	63.17	11622	3.679	4.080	-1.378	0.859	2.767	0.752	38.5
600S200-118	0.1242	33	1.283	4.36	6.641	2.275	0.611	0.690	6.641	2.214	53.05*	53.05	8267	6.595	4.753	-1.351	0.845	2.735	0.756	46.1
600S200-118	0.1242	50	1.283	4.36	6.641	2.275	0.611	0.690	6.641	2.214	78.44*	78.44	12526	6.595	4.753	-1.351	0.845	2.735	0.756	37.6
600S200-118	0.1242	57	1.283	4.36	6.641	2.275	0.611	0.690	6.641	2.214	75.56	75.56	14280	6.595	4.753	-1.351	0.845	2.735	0.756	38.3
600S250-43	0.0451	33	0.537	1.83	3.082	2.396	0.458	0.923	3.082	0.918	18.14	16.21	1416	0.364	3.411	-1.874	1.136	3.179	0.652	62.4
600S250-54	0.0566	33	0.670	2.28	3.819	2.388	0.562	0.917	3.819	1.159	22.90	21.90	2739	0.715	4.194	-1.860	1.129	3.163	0.654	62.3
600S250-54	0.0566	50	0.670	2.28	3.819	2.388	0.562	0.917	3.766	1.069	32.00	28.71	2823	0.715	4.194	-1.860	1.129	3.163	0.654	50.5
600S250-54	0.0566	57	0.670	2.28	3.819	2.388	0.562	0.917	3.664	1.041	35.54	31.17	2823	0.715	4.194	-1.860	1.129	3.163	0.654	47.3
600S250-68	0.0713	33	0.836	2.84	4.727	2.378	0.688	0.908	4.727	1.508	32.82*	31.50	4347	1.416	5.145	-1.842	1.119	3.142	0.656	59.2

1. *Web-height to thickness ratio exceeds 200. Web Stiffeners are required at all support points and concentrated loads.*
* *Allowable Moment includes cold work of forming.*

Table 5: "S" Shape C-Stud and C-Joist Section Properties (continued)

Section	Design Thickness	Fy	Gross Properties						Effective Properties					Torsional Properties						L_u
	(in)	(ksi)	Area (in^2)	Weight (lb/ft)	I_{xx} (in^4)	R_x (in)	I_{yy} (in^4)	R_y (in)	I_{xxe} (in^4)	S_{xxe} (in^3)	M_{a-L} (in-k)	M_{a-D} (in-k)	V_{ag} (lb)	Jx1000 (in^4)	C_w (in^6)	X_o (in)	m (in)	R_o (in)	ß	(in)
600S250-68	0.0713	50	0.836	2.84	4.727	2.378	0.688	0.908	4.723	1.386	41.49	39.07	5350	1.416	5.145	-1.842	1.119	3.142	0.656	50.4
600S250-68	0.0713	57	0.836	2.84	4.727	2.378	0.688	0.908	4.669	1.346	45.95	42.55	5713	1.416	5.145	-1.842	1.119	3.142	0.656	47.1
600S250-97	0.1017	33	1.169	3.98	6.496	2.357	0.923	0.889	6.496	2.161	48.81*	48.91	6911	4.030	6.947	-1.803	1.100	3.098	0.661	58.0
600S250-97	0.1017	50	1.169	3.98	6.496	2.357	0.923	0.889	6.496	2.063	69.38*	66.81	10472	4.030	6.947	-1.803	1.100	3.098	0.661	47.3
600S250-97	0.1017	57	1.169	3.98	6.496	2.357	0.923	0.889	6.496	2.061	70.35	67.50	11622	4.030	6.947	-1.803	1.100	3.098	0.661	46.9
600S250-118	0.1242	33	1.407	4.79	7.713	2.342	1.075	0.874	7.713	2.571	59.58*	59.59	8267	7.234	8.142	-1.775	1.085	3.066	0.665	57.3
600S250-118	0.1242	50	1.407	4.79	7.713	2.342	1.075	0.874	7.713	2.498	85.92*	86.83	12526	7.234	8.142	-1.775	1.085	3.066	0.665	46.6
600S250-118	0.1242	57	1.407	4.79	7.713	2.342	1.075	0.874	7.713	2.500	85.33	86.33	14280	7.234	8.142	-1.775	1.085	3.066	0.665	46.8
600S300-54	0.0566	33	0.726	2.47	4.319	2.439	0.875	1.098	4.269	1.211	23.93	22.80	2739	0.775	6.452	-2.299	1.372	3.527	0.575	72.8
600S300-54	0.0566	50	0.726	2.47	4.319	2.439	0.875	1.098	4.014	1.106	33.13	29.62	2823	0.775	6.452	-2.299	1.372	3.527	0.575	59.1
600S300-54	0.0566	57	0.726	2.47	4.319	2.439	0.875	1.098	3.945	1.076	36.71	32.09	2823	0.775	6.452	-2.299	1.372	3.527	0.575	55.3
600S300-68	0.0713	33	0.907	3.09	5.354	2.430	1.075	1.089	5.344	1.581	31.23	30.88	4347	1.537	7.937	-2.280	1.363	3.505	0.577	72.8
600S300-68	0.0713	50	0.907	3.09	5.354	2.430	1.075	1.089	5.221	1.446	43.30	40.53	5350	1.537	7.937	-2.280	1.363	3.505	0.577	59.0
600S300-68	0.0713	57	0.907	3.09	5.354	2.430	1.075	1.089	5.082	1.407	48.04	44.01	5713	1.537	7.937	-2.280	1.363	3.505	0.577	55.2
600S300-97	0.1017	33	1.271	4.32	7.381	2.410	1.454	1.070	7.381	2.352	52.07*	52.40	6911	4.381	10.776	-2.241	1.343	3.461	0.581	68.8
600S300-97	0.1017	50	1.271	4.32	7.381	2.410	1.454	1.070	7.280	2.247	67.28	64.67	10472	4.381	10.776	-2.241	1.343	3.461	0.581	58.8
600S300-97	0.1017	57	1.271	4.32	7.381	2.410	1.454	1.070	7.237	2.173	74.17	70.60	11622	4.381	10.776	-2.241	1.343	3.461	0.581	55.0
600S300-118	0.1242	33	1.531	5.21	8.785	2.395	1.704	1.055	8.785	2.840	64.29*	66.28	8267	7.872	12.683	-2.212	1.328	3.427	0.583	68.1
600S300-118	0.1242	50	1.531	5.21	8.785	2.395	1.704	1.055	8.713	2.797	94.24*	90.37	12526	7.872	12.683	-2.212	1.328	3.427	0.583	55.3
600S300-118	0.1242	57	1.531	5.21	8.785	2.395	1.704	1.055	8.703	2.796	95.44	91.18	14280	7.872	12.683	-2.212	1.328	3.427	0.583	55.0
600S350-54	0.0566	33	0.825	2.81	5.022	2.467	1.491	1.344	4.911	1.452	28.70	27.98	2739	0.881	12.942	-3.037	1.787	4.137	0.461	91.8
600S350-54	0.0566	50	0.825	2.81	5.022	2.467	1.491	1.344	4.721	1.335	39.97	36.56	2823	0.881	12.942	-3.037	1.787	4.137	0.461	74.4
600S350-54	0.0566	57	0.825	2.81	5.022	2.467	1.491	1.344	4.659	1.299	44.35	39.66	2823	0.881	12.942	-3.037	1.787	4.137	0.461	69.7
600S350-68	0.0713	33	1.032	3.51	6.237	2.459	1.841	1.336	6.237	1.949	38.50	37.63	4347	1.748	15.968	-3.018	1.777	4.115	0.462	91.8
600S350-68	0.0713	50	1.032	3.51	6.237	2.459	1.841	1.336	6.166	1.771	53.01	49.69	5350	1.748	15.968	-3.018	1.777	4.115	0.462	74.4
600S350-68	0.0713	57	1.032	3.51	6.237	2.459	1.841	1.336	6.095	1.713	58.47	54.05	5713	1.748	15.968	-3.018	1.777	4.115	0.462	69.6
600S350-97	0.1017	33	1.449	4.93	8.631	2.441	2.518	1.318	8.631	2.822	61.55*	62.49	6911	4.994	21.811	-2.979	1.757	4.071	0.464	87.5
600S350-97	0.1017	50	1.449	4.93	8.631	2.441	2.518	1.318	8.631	2.593	77.64	78.36	10472	4.994	21.811	-2.979	1.757	4.071	0.464	74.4
600S350-97	0.1017	57	1.449	4.93	8.631	2.441	2.518	1.318	8.631	2.490	85.00	85.69	11622	4.994	21.811	-2.979	1.757	4.071	0.464	69.5
600S350-118	0.1242	33	1.748	5.95	10.304	2.428	2.978	1.305	10.304	3.435	76.39*	76.40	8267	8.990	25.791	-2.951	1.742	4.038	0.466	86.9
600S350-118	0.1242	50	1.748	5.95	10.304	2.428	2.978	1.305	10.304	3.268	108.43*	107.66	12526	8.990	25.791	-2.951	1.742	4.038	0.466	70.6
600S350-118	0.1242	57	1.748	5.95	10.304	2.428	2.978	1.305	10.304	3.251	110.97	109.83	14280	8.990	25.791	-2.951	1.742	4.038	0.466	69.6
800S125-33[1]	0.0346	33	0.366	1.25	2.881	2.806	0.044	0.347	2.656	0.507	10.02	8.22	474	0.146	0.582	-0.519	0.349	2.875	0.967	26.6
800S125-43	0.0451	33	0.475	1.62	3.721	2.799	0.056	0.342	3.581	0.773	15.27	12.56	1051	0.322	0.735	-0.510	0.344	2.865	0.968	26.3
800S125-54	0.0566	33	0.592	2.01	4.593	2.786	0.066	0.335	4.566	1.035	20.46	17.87	2091	0.632	0.889	-0.499	0.338	2.850	0.969	26.0
800S125-54	0.0566	50	0.592	2.01	4.593	2.786	0.066	0.335	4.431	0.942	28.21	23.18	2091	0.632	0.889	-0.499	0.338	2.850	0.969	21.1
800S125-54	0.0566	57	0.592	2.01	4.593	2.786	0.066	0.335	4.392	0.900	30.72	25.09	2091	0.632	0.889	-0.499	0.338	2.850	0.969	19.8
800S125-68	0.0713	33	0.738	2.51	5.653	2.768	0.078	0.324	5.644	1.375	27.18	25.21	4221	1.250	1.068	-0.485	0.330	2.829	0.971	25.6
800S125-68	0.0713	50	0.738	2.51	5.653	2.768	0.078	0.324	5.632	1.287	38.54	33.22	4221	1.250	1.068	-0.485	0.330	2.829	0.971	20.8
800S125-68	0.0713	57	0.738	2.51	5.653	2.768	0.078	0.324	5.600	1.238	42.27	36.11	4221	1.250	1.068	-0.485	0.330	2.829	0.971	19.4
800S137-33[1]	0.0346	33	0.388	1.32	3.198	2.873	0.073	0.435	2.998	0.622	12.30	10.71	474	0.155	0.957	-0.696	0.460	2.987	0.946	32.5
800S137-43	0.0451	33	0.503	1.71	4.134	2.866	0.093	0.430	4.001	0.896	17.70	15.78	1051	0.341	1.214	-0.687	0.454	2.978	0.947	32.2
800S137-54	0.0566	33	0.627	2.13	5.110	2.855	0.112	0.423	5.077	1.179	23.29	21.74	2091	0.670	1.478	-0.676	0.448	2.964	0.948	32.0
800S137-54	0.0566	50	0.627	2.13	5.110	2.855	0.112	0.423	4.974	1.083	32.42	28.47	2091	0.670	1.478	-0.676	0.448	2.964	0.948	25.9
800S137-54	0.0566	57	0.627	2.13	5.110	2.855	0.112	0.423	4.940	1.047	35.74	30.90	2091	0.670	1.478	-0.676	0.448	2.964	0.948	24.3
800S137-68	0.0713	33	0.782	2.66	6.303	2.839	0.134	0.414	6.303	1.541	30.45	29.75	4221	1.325	1.789	-0.661	0.440	2.944	0.950	31.6
800S137-68	0.0713	50	0.782	2.66	6.303	2.839	0.134	0.414	6.285	1.468	43.96	39.57	4221	1.325	1.789	-0.661	0.440	2.944	0.950	25.6
800S137-68	0.0713	57	0.782	2.66	6.303	2.839	0.134	0.414	6.246	1.444	49.30	43.12	4221	1.325	1.789	-0.661	0.440	2.944	0.950	24.0
800S137-97	0.1017	33	1.093	3.72	8.597	2.805	0.169	0.394	8.597	2.149	53.09*	53.09	8843	3.767	2.349	-0.630	0.423	2.902	0.953	27.6
800S137-97	0.1017	50	1.093	3.72	8.597	2.805	0.169	0.394	8.597	2.149	64.35	63.91	10885	3.767	2.349	-0.630	0.423	2.902	0.953	25.0
800S137-97	0.1017	57	1.093	3.72	8.597	2.805	0.169	0.394	8.597	2.149	73.36	70.30	11622	3.767	2.349	-0.630	0.423	2.902	0.953	23.4
800S162-33[1]	0.0346	33	0.413	1.41	3.582	2.943	0.125	0.550	3.384	0.710	14.03	12.61	474	0.165	1.630	-0.936	0.607	3.137	0.911	40.1
800S162-43	0.0451	33	0.537	1.83	4.633	2.937	0.160	0.546	4.500	1.019	20.14	18.33	1051	0.364	2.076	-0.926	0.601	3.128	0.912	39.8
800S162-54	0.0566	33	0.670	2.28	5.736	2.927	0.194	0.539	5.702	1.334	26.36	24.98	2091	0.715	2.539	-0.914	0.594	3.113	0.914	39.6
800S162-54	0.0566	50	0.670	2.28	5.736	2.927	0.194	0.539	5.600	1.229	36.79	32.81	2091	0.715	2.539	-0.914	0.594	3.113	0.914	32.1
800S162-54	0.0566	57	0.670	2.28	5.736	2.927	0.194	0.539	5.568	1.185	40.45	35.64	2091	0.715	2.539	-0.914	0.594	3.113	0.914	30.1
800S162-68	0.0713	33	0.836	2.84	7.089	2.913	0.235	0.530	7.089	1.737	34.32	33.84	4221	1.416	3.093	-0.899	0.586	3.094	0.916	39.3
800S162-68	0.0713	50	0.836	2.84	7.089	2.913	0.235	0.530	7.070	1.663	49.80	45.11	4221	1.416	3.093	-0.899	0.586	3.094	0.916	31.9
800S162-68	0.0713	57	0.836	2.84	7.089	2.913	0.235	0.530	7.034	1.619	55.27	49.18	4221	1.416	3.093	-0.899	0.586	3.094	0.916	29.8
800S162-97	0.1017	33	1.169	3.98	9.713	2.883	0.305	0.510	9.713	2.428	58.27*	58.27	8843	4.030	4.114	-0.866	0.568	3.053	0.919	35.1
800S162-97	0.1017	50	1.169	3.98	9.713	2.883	0.305	0.510	9.713	2.428	72.70	71.93	10885	4.030	4.114	-0.866	0.568	3.053	0.919	31.4
800S162-97	0.1017	57	1.169	3.98	9.713	2.883	0.305	0.510	9.713	2.428	82.88	79.10	11622	4.030	4.114	-0.866	0.568	3.053	0.919	29.3
800S162-118	0.1242	33	1.407	4.79	11.504	2.860	0.345	0.496	11.504	2.876	71.47*	71.47	11341	7.234	4.766	-0.842	0.556	3.022	0.922	34.1
800S162-118	0.1242	50	1.407	4.79	11.504	2.860	0.345	0.496	11.504	2.876	105.23*	105.23	16235	7.234	4.766	-0.842	0.556	3.022	0.922	28.0
800S162-118	0.1242	57	1.407	4.79	11.504	2.860	0.345	0.496	11.504	2.876	98.16	98.16	17334	7.234	4.766	-0.842	0.556	3.022	0.922	29.0
800S200-33[1]	0.0346	33	0.448	1.52	4.096	3.023	0.227	0.712	4.096	0.816	16.12	14.52	474	0.179	2.971	-1.288	0.817	3.363	0.853	50.6
800S200-43	0.0451	33	0.582	1.98	5.302	3.018	0.292	0.708	5.302	1.293	25.54	20.99	1051	0.395	3.797	-1.277	0.811	3.353	0.855	50.3
800S200-54	0.0566	33	0.726	2.47	6.573	3.009	0.357	0.701	6.573	1.643	35.75*	30.37	2091	0.775	4.663	-1.265	0.804	3.338	0.856	47.8
800S200-54	0.0566	50	0.726	2.47	6.573	3.009	0.357	0.701	6.573	1.499	44.87	37.37	2091	0.775	4.663	-1.265	0.804	3.338	0.856	40.7
800S200-54	0.0566	57	0.726	2.47	6.573	3.009	0.357	0.701	6.573	1.398	47.72	40.58	2091	0.775	4.663	-1.265	0.804	3.338	0.856	38.1
800S200-68	0.0713	33	0.907	3.09	8.140	2.996	0.435	0.692	8.140	2.035	45.29*	41.79	4221	1.537	5.712	-1.248	0.796	3.319	0.859	47.0
800S200-68	0.0713	50	0.907	3.09	8.140	2.996	0.435	0.692	8.140	1.964	65.21*	54.70	4221	1.537	5.712	-1.248	0.796	3.319	0.859	38.4
800S200-68	0.0713	57	0.907	3.09	8.140	2.996	0.435	0.692	8.140	1.958	66.83	55.70	4221	1.537	5.712	-1.248	0.796	3.319	0.859	37.9

1. *Web-height to thickness ratio exceeds 200. Web Stiffeners are required at all support points and concentrated loads.*
* *Allowable Moment includes cold work of forming.*

Table 5: "S" Shape C-Stud and C-Joist Section Properties (continued)

Section	Design Thickness	Fy	Gross Properties						Effective Properties					Torsional Properties						Lu
			Area	Weight	I_{xx}	R_x	I_{yy}	R_y	I_{xxe}	S_{xxe}	$M_{a\text{-}L}$	$M_{a\text{-}D}$	V_{ag}	Jx1000	C_w	X_o	m	R_o	ß	
	(in)	(ksi)	(in²)	(lb/ft)	(in⁴)	(in)	(in⁴)	(in)	(in⁴)	(in³)	(in-k)	(in-k)	(lb)	(in⁴)	(in⁶)	(in)	(in)	(in)		(in)
800S200-97	0.1017	33	1.271	4.32	11.203	2.969	0.576	0.673	11.203	2.801	65.12*	65.12	8843	4.381	7.684	-1.214	0.777	3.278	0.863	45.5
800S200-97	0.1017	50	1.271	4.32	11.203	2.969	0.576	0.673	11.203	2.801	96.63*	89.76	10885	4.381	7.684	-1.214	0.777	3.278	0.863	37.2
800S200-97	0.1017	57	1.271	4.32	11.203	2.969	0.576	0.673	11.203	2.801	95.60	89.09	11622	4.381	7.684	-1.214	0.777	3.278	0.863	37.4
800S200-118	0.1242	33	1.531	5.21	13.316	2.949	0.665	0.659	13.316	3.329	79.78*	79.78	11341	7.872	8.981	-1.188	0.764	3.247	0.866	44.6
800S200-118	0.1242	50	1.531	5.21	13.316	2.949	0.665	0.659	13.316	3.329	117.95*	117.55	16235	7.872	8.981	-1.188	0.764	3.247	0.866	36.5
800S200-118	0.1242	57	1.531	5.21	13.316	2.949	0.665	0.659	13.316	3.329	113.62	113.62	17334	7.872	8.981	-1.188	0.764	3.247	0.866	37.2
800S250-43	0.0451	33	0.627	2.13	6.015	3.097	0.500	0.893	6.015	1.313	25.95	22.06	1051	0.425	6.374	-1.675	1.043	3.632	0.787	61.5
800S250-54	0.0566	33	0.783	2.66	7.465	3.088	0.614	0.886	7.465	1.712	33.82	30.07	2091	0.836	7.850	-1.661	1.036	3.617	0.789	61.4
800S250-54	0.0566	50	0.783	2.66	7.465	3.088	0.614	0.886	7.378	1.525	45.66	39.13	2091	0.836	7.850	-1.661	1.036	3.617	0.789	49.8
800S250-54	0.0566	57	0.783	2.66	7.465	3.088	0.614	0.886	7.305	1.433	48.92	42.40	2091	0.836	7.850	-1.661	1.036	3.617	0.789	46.6
800S250-68	0.0713	33	0.978	3.33	9.261	3.077	0.752	0.877	9.261	2.220	48.33*	43.63	4221	1.658	9.652	-1.644	1.027	3.597	0.791	58.2
800S250-68	0.0713	50	0.978	3.33	9.261	3.077	0.752	0.877	9.240	2.059	61.65	53.75	4221	1.658	9.652	-1.644	1.027	3.597	0.791	49.6
800S250-68	0.0713	57	0.978	3.33	9.261	3.077	0.752	0.877	9.135	2.007	68.51	58.41	4221	1.658	9.652	-1.644	1.027	3.597	0.791	46.4
800S250-97	0.1017	33	1.372	4.67	12.789	3.053	1.009	0.857	12.789	3.191	72.07*	70.72	8843	4.731	13.091	-1.607	1.008	3.555	0.796	56.8
800S250-97	0.1017	50	1.372	4.67	12.789	3.053	1.009	0.857	12.789	3.054	102.70*	93.42	10885	4.731	13.091	-1.607	1.008	3.555	0.796	46.4
800S250-97	0.1017	57	1.372	4.67	12.789	3.053	1.009	0.857	12.789	3.051	104.14	94.35	11622	4.731	13.091	-1.607	1.008	3.555	0.796	46.0
800S250-118	0.1242	33	1.655	5.63	15.242	3.035	1.175	0.843	15.242	3.810	88.31*	88.31	11341	8.511	15.395	-1.580	0.994	3.524	0.799	55.9
800S250-118	0.1242	50	1.655	5.63	15.242	3.035	1.175	0.843	15.242	3.707	127.51*	122.92	16235	8.511	15.395	-1.580	0.994	3.524	0.799	45.6
800S250-118	0.1242	57	1.655	5.63	15.242	3.035	1.175	0.843	15.242	3.710	126.62	122.24	17334	8.511	15.395	-1.580	0.994	3.524	0.799	45.8
800S300-54	0.0566	33	0.839	2.86	8.358	3.156	0.960	1.069	8.249	1.785	35.28	31.13	2091	0.896	12.076	-2.073	1.271	3.924	0.721	72.2
800S300-54	0.0566	50	0.839	2.86	8.358	3.156	0.960	1.069	7.862	1.535	45.96	40.22	2091	0.896	12.076	-2.073	1.271	3.924	0.721	58.6
800S300-54	0.0566	57	0.839	2.86	8.358	3.156	0.960	1.069	7.784	1.443	49.24	43.51	2091	0.896	12.076	-2.073	1.271	3.924	0.721	54.8
800S300-68	0.0713	33	1.050	3.57	10.382	3.145	1.179	1.060	10.351	2.321	45.86	42.54	4221	1.779	14.888	-2.055	1.262	3.903	0.723	72.0
800S300-68	0.0713	50	1.050	3.57	10.382	3.145	1.179	1.060	10.082	2.145	64.21	55.47	4221	1.779	14.888	-2.055	1.262	3.903	0.723	58.4
800S300-68	0.0713	57	1.050	3.57	10.382	3.145	1.179	1.060	9.838	2.094	71.48	60.13	4221	1.779	14.888	-2.055	1.262	3.903	0.723	54.7
800S300-97	0.1017	33	1.474	5.02	14.375	3.123	1.595	1.040	14.375	3.443	76.21*	73.25	8843	5.082	20.304	-2.017	1.243	3.860	0.727	67.7
800S300-97	0.1017	50	1.474	5.02	14.375	3.123	1.595	1.040	14.170	3.304	98.92	89.89	10885	5.082	20.304	-2.017	1.243	3.860	0.727	58.1
800S300-97	0.1017	57	1.474	5.02	14.375	3.123	1.595	1.040	14.088	3.207	109.45	97.92	11622	5.082	20.304	-2.017	1.243	3.860	0.727	54.3
800S300-118	0.1242	33	1.779	6.05	17.167	3.106	1.871	1.025	17.167	4.168	94.33*	95.78	11341	9.149	23.979	-1.989	1.229	3.828	0.730	66.8
800S300-118	0.1242	50	1.779	6.05	17.167	3.106	1.871	1.025	17.022	4.108	138.41*	126.69	16235	9.149	23.979	-1.989	1.229	3.828	0.730	54.5
800S300-118	0.1242	57	1.779	6.05	17.167	3.106	1.871	1.025	17.002	4.107	140.18	127.80	17334	9.149	23.979	-1.989	1.229	3.828	0.730	54.1
800S350-54	0.0566	33	0.938	3.19	9.683	3.212	1.646	1.325	9.477	2.125	41.98	38.29	2091	1.002	22.897	-2.766	1.668	4.441	0.612	90.0
800S350-54	0.0566	50	0.938	3.19	9.683	3.212	1.646	1.325	9.191	1.869	55.96	49.74	2091	1.002	22.897	-2.766	1.668	4.441	0.612	73.1
800S350-54	0.0566	57	0.938	3.19	9.683	3.212	1.646	1.325	9.113	1.768	60.35	53.88	2091	1.002	22.897	-2.766	1.668	4.441	0.612	68.4
800S350-68	0.0713	33	1.174	4.00	12.046	3.203	2.034	1.316	12.046	2.837	56.07	51.89	4221	1.990	28.308	-2.748	1.658	4.421	0.614	89.9
800S350-68	0.0713	50	1.174	4.00	12.046	3.203	2.034	1.316	11.909	2.596	77.73	68.05	4221	1.990	28.308	-2.748	1.658	4.421	0.614	72.9
800S350-68	0.0713	57	1.174	4.00	12.046	3.203	2.034	1.316	11.772	2.516	85.89	73.88	4221	1.990	28.308	-2.748	1.658	4.421	0.614	68.3
800S350-97	0.1017	33	1.652	5.62	16.737	3.183	2.784	1.298	16.737	4.101	89.43*	87.25	8843	5.696	38.834	-2.710	1.639	4.377	0.617	85.4
800S350-97	0.1017	50	1.652	5.62	16.737	3.183	2.784	1.298	16.737	3.785	113.34	108.67	10885	5.696	38.834	-2.710	1.639	4.377	0.617	72.7
800S350-97	0.1017	57	1.652	5.62	16.737	3.183	2.784	1.298	16.737	3.649	124.53	118.57	11622	5.696	38.834	-2.710	1.639	4.377	0.617	68.0
800S350-118	0.1242	33	1.997	6.79	20.041	3.168	3.295	1.285	20.041	5.010	111.44*	111.44	11341	10.267	46.068	-2.682	1.624	4.345	0.619	84.6
800S350-118	0.1242	50	1.997	6.79	20.041	3.168	3.295	1.285	20.041	4.762	158.02*	150.37	16235	10.267	46.068	-2.682	1.624	4.345	0.619	68.9
800S350-118	0.1242	57	1.997	6.79	20.041	3.168	3.295	1.285	20.041	4.740	161.78	153.32	17334	10.267	46.068	-2.682	1.624	4.345	0.619	67.9
1000S162-43[1]	0.0451	33	0.627	2.13	8.025	3.577	0.168	0.518	7.523	1.302	25.74	22.49	836	0.425	3.430	-0.823	0.545	3.707	0.951	38.8
1000S162-54	0.0566	33	0.783	2.66	9.950	3.565	0.204	0.511	9.627	1.722	34.02	31.11	1661	0.836	4.198	-0.812	0.538	3.692	0.952	38.6
1000S162-54	0.0566	50	0.783	2.66	9.950	3.565	0.204	0.511	9.391	1.572	47.07	40.37	1661	0.836	4.198	-0.812	0.538	3.692	0.952	31.3
1000S162-54	0.0566	57	0.783	2.66	9.950	3.565	0.204	0.511	9.321	1.512	51.62	43.71	1661	0.836	4.198	-0.812	0.538	3.692	0.952	29.3
1000S162-68	0.0713	33	0.978	3.33	12.325	3.550	0.246	0.502	12.256	2.276	44.98	42.91	3345	1.658	5.121	-0.798	0.531	3.673	0.953	38.2
1000S162-68	0.0713	50	0.978	3.33	12.325	3.550	0.246	0.502	11.978	2.154	64.51	56.35	3345	1.658	5.121	-0.798	0.531	3.673	0.953	31.0
1000S162-68	0.0713	57	0.978	3.33	12.325	3.550	0.246	0.502	11.892	2.090	71.35	61.21	3345	1.658	5.121	-0.798	0.531	3.673	0.953	29.0
1000S162-97	0.1017	33	1.372	4.67	16.967	3.516	0.320	0.483	16.967	3.393	67.06	67.05	8843	4.731	6.827	-0.768	0.514	3.631	0.955	37.5
1000S162-97	0.1017	50	1.372	4.67	16.967	3.516	0.320	0.483	16.967	3.269	97.89	92.56	9864	4.731	6.827	-0.768	0.514	3.631	0.955	30.4
1000S162-97	0.1017	57	1.372	4.67	16.967	3.516	0.320	0.483	16.967	3.219	109.89	101.23	9864	4.731	6.827	-0.768	0.514	3.631	0.955	28.4
1000S162-118	0.1242	33	1.655	5.63	20.169	3.491	0.363	0.468	20.169	4.034	100.24*	100.25	13189	8.511	7.924	-0.746	0.502	3.600	0.957	32.9
1000S162-118	0.1242	50	1.655	5.63	20.169	3.491	0.363	0.468	20.169	4.034	120.77	120.34	16235	8.511	7.924	-0.746	0.502	3.600	0.957	30.0
1000S162-118	0.1242	57	1.655	5.63	20.169	3.491	0.363	0.468	20.169	4.015	137.03	132.40	17334	8.511	7.924	-0.746	0.502	3.600	0.957	28.0
1000S200-43[1]	0.0451	33	0.672	2.29	9.085	3.676	0.309	0.677	8.602	1.470	29.05	26.14	836	0.456	6.236	-1.147	0.743	3.910	0.914	49.3
1000S200-54	0.0566	33	0.839	2.86	11.278	3.666	0.378	0.671	10.953	1.984	39.20	35.86	1661	0.896	7.665	-1.135	0.737	3.896	0.915	49.1
1000S200-54	0.0566	50	0.839	2.86	11.278	3.666	0.378	0.671	10.769	1.705	51.05	46.62	1661	0.896	7.665	-1.135	0.737	3.896	0.915	39.8
1000S200-54	0.0566	57	0.839	2.86	11.278	3.666	0.378	0.671	10.712	1.621	55.33	50.50	1661	0.896	7.665	-1.135	0.737	3.896	0.915	37.3
1000S200-68	0.0713	33	1.050	3.57	13.994	3.652	0.460	0.662	13.920	2.607	51.51	49.07	3345	1.779	9.401	-1.120	0.729	3.876	0.917	48.8
1000S200-68	0.0713	50	1.050	3.57	13.994	3.652	0.460	0.662	13.665	2.420	72.46	64.50	3345	1.779	9.401	-1.120	0.729	3.876	0.917	39.6
1000S200-68	0.0713	57	1.050	3.57	13.994	3.652	0.460	0.662	13.589	2.330	79.53	70.07	3345	1.779	9.401	-1.120	0.729	3.876	0.917	37.0
1000S200-97	0.1017	33	1.474	5.02	19.336	3.622	0.609	0.643	19.336	3.867	76.42	76.42	8843	5.082	12.679	-1.088	0.711	3.836	0.920	48.2
1000S200-97	0.1017	50	1.474	5.02	19.336	3.622	0.609	0.643	19.336	3.741	112.00	104.73	9864	5.082	12.679	-1.088	0.711	3.836	0.920	39.0
1000S200-97	0.1017	57	1.474	5.02	19.336	3.622	0.609	0.643	19.336	3.690	125.95	114.50	9864	5.082	12.679	-1.088	0.711	3.836	0.920	36.5
1000S200-118	0.1242	33	1.779	6.05	23.052	3.599	0.703	0.629	23.052	4.610	110.50*	110.50	13189	9.149	14.848	-1.064	0.699	3.805	0.922	43.3
1000S200-118	0.1242	50	1.779	6.05	23.052	3.599	0.703	0.629	23.052	4.610	138.04	135.74	16235	9.149	14.848	-1.064	0.699	3.805	0.922	38.7
1000S200-118	0.1242	57	1.779	6.05	23.052	3.599	0.703	0.629	23.052	4.591	156.69	149.19	17334	9.149	14.848	-1.064	0.699	3.805	0.922	36.2
1000S250-43[1]	0.0451	33	0.717	2.44	10.203	3.771	0.531	0.860	10.203	1.617	31.95	27.67	836	0.486	10.481	-1.518	0.965	4.155	0.867	60.7
1000S250-54	0.0566	33	0.896	3.05	12.677	3.762	0.653	0.854	12.677	2.277	44.99	38.02	1661	0.957	12.922	-1.505	0.958	4.140	0.868	60.5
1000S250-54	0.0566	50	0.896	3.05	12.677	3.762	0.653	0.854	12.660	1.879	56.26	49.16	1661	0.957	12.922	-1.505	0.958	4.140	0.868	49.1
1000S250-54	0.0566	57	0.896	3.05	12.677	3.762	0.653	0.854	12.562	1.773	60.53	53.18	1661	0.957	12.922	-1.505	0.958	4.140	0.868	46.0

1. *Web-height to thickness ratio exceeds 200. Web Stiffeners are required at all support points and concentrated loads.*
* *Allowable Moment includes cold work of forming.*

Table 5: "S" Shape C-Stud and C-Joist Section Properties (continued)

Section	Design Thickness	Fy	Gross Properties						Effective Properties					Torsional Properties						Lu
	(in)	(ksi)	Area (in²)	Weight (lb/ft)	I_{xx} (in⁴)	R_x (in)	I_{yy} (in⁴)	R_y (in)	I_{xxe} (in⁴)	S_{xxe} (in³)	$M_{a\text{-}L}$ (in-k)	$M_{a\text{-}D}$ (in-k)	V_{ag} (lb)	Jx1000 (in⁴)	C_w (in⁶)	X_o (in)	m (in)	R_o (in)	ß	(in)
1000S250-68	0.0713	33	1.121	3.81	15.751	3.749	0.799	0.844	15.751	3.028	65.93*	55.62	3345	1.899	15.909	-1.488	0.950	4.121	0.870	57.3
1000S250-68	0.0713	50	1.121	3.81	15.751	3.749	0.799	0.844	15.741	2.768	82.89	68.13	3345	1.899	15.909	-1.488	0.950	4.121	0.870	48.8
1000S250-68	0.0713	57	1.121	3.81	15.751	3.749	0.799	0.844	15.625	2.586	88.26	73.88	3345	1.899	15.909	-1.488	0.950	4.121	0.870	45.7
1000S250-97	0.1017	33	1.576	5.36	21.827	3.722	1.072	0.825	21.827	4.357	98.41*	91.77	8843	5.433	21.632	-1.454	0.932	4.080	0.873	55.8
1000S250-97	0.1017	50	1.576	5.36	21.827	3.722	1.072	0.825	21.827	4.181	140.63*	120.13	9864	5.433	21.632	-1.454	0.932	4.080	0.873	45.6
1000S250-97	0.1017	57	1.576	5.36	21.827	3.722	1.072	0.825	21.827	4.178	142.62	121.30	9864	5.433	21.632	-1.454	0.932	4.080	0.873	45.3
1000S250-118	0.1242	33	1.904	6.48	26.080	3.701	1.249	0.810	26.080	5.216	120.89*	120.71	13189	9.788	25.490	-1.428	0.918	4.049	0.876	54.7
1000S250-118	0.1242	50	1.904	6.48	26.080	3.701	1.249	0.810	26.080	5.082	174.84*	159.80	16235	9.788	25.490	-1.428	0.918	4.049	0.876	44.8
1000S250-118	0.1242	57	1.904	6.48	26.080	3.701	1.249	0.810	26.080	5.086	173.60	158.94	17334	9.788	25.490	-1.428	0.918	4.049	0.876	44.9
1000S300-54	0.0566	33	0.953	3.24	14.076	3.844	1.024	1.037	13.938	2.312	45.69	39.41	1661	1.017	19.888	-1.892	1.185	4.408	0.816	71.5
1000S300-54	0.0566	50	0.953	3.24	14.076	3.844	1.024	1.037	13.440	1.902	56.96	50.69	1661	1.017	19.888	-1.892	1.185	4.408	0.816	58.1
1000S300-54	0.0566	57	0.953	3.24	14.076	3.844	1.024	1.037	13.318	1.793	61.21	54.76	1661	1.017	19.888	-1.892	1.185	4.408	0.816	54.4
1000S300-68	0.0713	33	1.192	4.06	17.509	3.832	1.258	1.027	17.441	3.158	62.41	54.29	3345	2.020	24.551	-1.874	1.176	4.388	0.818	71.3
1000S300-68	0.0713	50	1.192	4.06	17.509	3.832	1.258	1.027	17.099	2.802	83.89	70.40	3345	2.020	24.551	-1.874	1.176	4.388	0.818	57.8
1000S300-68	0.0713	57	1.192	4.06	17.509	3.832	1.258	1.027	16.901	2.632	89.83	76.21	3345	2.020	24.551	-1.874	1.176	4.388	0.818	54.1
1000S300-97	0.1017	33	1.677	5.71	24.318	3.808	1.702	1.007	24.318	4.671	103.39*	94.70	8843	5.783	33.570	-1.838	1.158	4.346	0.821	66.9
1000S300-97	0.1017	50	1.677	5.71	24.318	3.808	1.702	1.007	23.970	4.499	134.69	115.62	9864	5.783	33.570	-1.838	1.158	4.346	0.821	57.4
1000S300-97	0.1017	57	1.677	5.71	24.318	3.808	1.702	1.007	23.836	4.379	149.45	125.73	9864	5.783	33.570	-1.838	1.158	4.346	0.821	53.7
1000S300-118	0.1242	33	2.028	6.90	29.109	3.789	1.997	0.992	29.109	5.662	128.16*	125.04	13189	10.427	39.725	-1.811	1.144	4.315	0.824	65.8
1000S300-118	0.1242	50	2.028	6.90	29.109	3.789	1.997	0.992	28.861	5.586	188.23*	164.19	16235	10.427	39.725	-1.811	1.144	4.315	0.824	53.8
1000S300-118	0.1242	57	2.028	6.90	29.109	3.789	1.997	0.992	28.828	5.585	190.63	165.59	17334	10.427	39.725	-1.811	1.144	4.315	0.824	53.4
1000S350-54	0.0566	33	1.052	3.58	16.220	3.927	1.768	1.297	15.942	2.772	54.77	48.69	1661	1.123	36.575	-2.546	1.566	4.857	0.725	88.9
1000S350-54	0.0566	50	1.052	3.58	16.220	3.927	1.768	1.297	15.577	2.328	69.69	62.97	1661	1.123	36.575	-2.546	1.566	4.857	0.725	72.2
1000S350-54	0.0566	57	1.052	3.58	16.220	3.927	1.768	1.297	15.456	2.207	75.32	68.12	1661	1.123	36.575	-2.546	1.566	4.857	0.725	67.6
1000S350-68	0.0713	33	1.317	4.48	20.204	3.917	2.185	1.288	20.204	3.824	75.57	66.40	3345	2.232	45.277	-2.529	1.557	4.837	0.727	88.7
1000S350-68	0.0713	50	1.317	4.48	20.204	3.917	2.185	1.288	20.026	3.417	102.32	86.60	3345	2.232	45.277	-2.529	1.557	4.837	0.727	72.0
1000S350-68	0.0713	57	1.317	4.48	20.204	3.917	2.185	1.288	19.913	3.198	109.15	93.89	3345	2.232	45.277	-2.529	1.557	4.837	0.727	67.4
1000S350-97	0.1017	33	1.855	6.31	28.148	3.895	2.992	1.270	28.148	5.517	120.33*	112.80	8843	6.397	62.280	-2.492	1.538	4.795	0.730	84.1
1000S350-97	0.1017	50	1.855	6.31	28.148	3.895	2.992	1.270	28.148	5.118	153.25	139.74	9864	6.397	62.280	-2.492	1.538	4.795	0.730	71.6
1000S350-97	0.1017	57	1.855	6.31	28.148	3.895	2.992	1.270	28.148	4.948	168.89	152.18	9864	6.397	62.280	-2.492	1.538	4.795	0.730	67.1
1000S350-118	0.1242	33	2.245	7.64	33.772	3.878	3.543	1.256	33.772	6.754	150.23*	147.03	13189	11.544	74.030	-2.465	1.524	4.764	0.732	83.1
1000S350-118	0.1242	50	2.245	7.64	33.772	3.878	3.543	1.256	33.772	6.427	213.25*	194.46	16235	11.544	74.030	-2.465	1.524	4.764	0.732	67.8
1000S350-118	0.1242	57	2.245	7.64	33.772	3.878	3.543	1.256	33.772	6.399	218.39	198.18	17334	11.544	74.030	-2.465	1.524	4.764	0.732	66.8
1200S162-54[1]	0.0566	33	0.896	3.05	15.730	4.190	0.212	0.486	14.743	2.109	41.68	36.38	1377	0.957	6.340	-0.732	0.493	4.281	0.971	37.5
1200S162-54[1]	0.0566	50	0.896	3.05	15.730	4.190	0.212	0.486	14.298	1.914	57.31	46.75	1377	0.957	6.340	-0.732	0.493	4.281	0.971	30.5
1200S162-54[1]	0.0566	57	0.896	3.05	15.730	4.190	0.212	0.486	14.170	1.839	62.76	50.50	1377	0.957	6.340	-0.732	0.493	4.281	0.971	28.5
1200S162-68	0.0713	33	1.121	3.81	19.518	4.173	0.255	0.477	18.955	2.817	55.66	50.95	2771	1.899	7.739	-0.719	0.485	4.261	0.972	37.2
1200S162-68	0.0713	50	1.121	3.81	19.518	4.173	0.255	0.477	18.390	2.645	79.19	66.14	2771	1.899	7.739	-0.719	0.485	4.261	0.972	30.2
1200S162-68	0.0713	57	1.121	3.81	19.518	4.173	0.255	0.477	18.223	2.561	87.40	71.62	2771	1.899	7.739	-0.719	0.485	4.261	0.972	28.2
1200S162-97	0.1017	33	1.576	5.36	26.966	4.137	0.331	0.459	26.966	4.327	85.51	83.86	8147	5.433	10.331	-0.691	0.470	4.219	0.973	36.4
1200S162-97	0.1017	50	1.576	5.36	26.966	4.137	0.331	0.459	26.735	4.091	122.49	111.30	8147	5.433	10.331	-0.691	0.470	4.219	0.973	29.5
1200S162-97	0.1017	57	1.576	5.36	26.966	4.137	0.331	0.459	26.533	4.014	137.02	121.21	8147	5.433	10.331	-0.691	0.470	4.219	0.973	27.6
1200S162-118	0.1242	33	1.904	6.48	32.145	4.109	0.376	0.444	32.145	5.357	105.87	105.87	13189	9.788	12.002	-0.670	0.459	4.187	0.974	35.8
1200S162-118	0.1242	50	1.904	6.48	32.145	4.109	0.376	0.444	32.145	5.168	154.74	147.23	14986	9.788	12.002	-0.670	0.459	4.187	0.974	29.0
1200S162-118	0.1242	57	1.904	6.48	32.145	4.109	0.376	0.444	32.145	5.083	173.48	161.09	14986	9.788	12.002	-0.670	0.459	4.187	0.974	27.1
1200S200-54[1]	0.0566	33	0.953	3.24	17.662	4.306	0.393	0.643	16.678	2.425	47.93	42.47	1377	1.017	11.550	-1.032	0.681	4.474	0.947	48.0
1200S200-54[1]	0.0566	50	0.953	3.24	17.662	4.306	0.393	0.643	16.334	2.073	62.07	54.74	1377	1.017	11.550	-1.032	0.681	4.474	0.947	39.0
1200S200-54[1]	0.0566	57	0.953	3.24	17.662	4.306	0.393	0.643	16.227	1.969	67.19	59.17	1377	1.017	11.550	-1.032	0.681	4.474	0.947	36.5
1200S200-68	0.0713	33	1.192	4.06	21.947	4.291	0.479	0.634	21.376	3.215	63.54	58.83	2771	2.020	14.176	-1.017	0.673	4.455	0.948	47.7
1200S200-68	0.0713	50	1.192	4.06	21.947	4.291	0.479	0.634	20.864	2.963	88.71	76.55	2771	2.020	14.176	-1.017	0.673	4.455	0.948	38.7
1200S200-68	0.0713	57	1.192	4.06	21.947	4.291	0.479	0.634	20.717	2.847	97.16	82.95	2771	2.020	14.176	-1.017	0.673	4.455	0.948	36.3
1200S200-97	0.1017	33	1.677	5.71	30.417	4.258	0.635	0.615	30.417	4.899	96.81	95.43	8147	5.783	19.150	-0.987	0.656	4.414	0.950	47.0
1200S200-97	0.1017	50	1.677	5.71	30.417	4.258	0.635	0.615	30.175	4.660	139.51	126.86	8147	5.783	19.150	-0.987	0.656	4.414	0.950	38.1
1200S200-97	0.1017	57	1.677	5.71	30.417	4.258	0.635	0.615	29.972	4.582	156.40	138.21	8147	5.783	19.150	-0.987	0.656	4.414	0.950	35.7
1200S200-118	0.1242	33	2.028	6.90	36.347	4.234	0.732	0.601	36.347	6.058	119.71	119.71	13189	10.427	22.451	-0.964	0.644	4.384	0.952	46.5
1200S200-118	0.1242	50	2.028	6.90	36.347	4.234	0.732	0.601	36.347	5.865	175.59	166.80	14986	10.427	22.451	-0.964	0.644	4.384	0.952	37.7
1200S200-118	0.1242	57	2.028	6.90	36.347	4.234	0.732	0.601	36.347	5.778	197.21	182.52	14986	10.427	22.451	-0.964	0.644	4.384	0.952	35.3
1200S250-54[1]	0.0566	33	1.009	3.43	19.681	4.416	0.683	0.823	18.832	2.482	49.05	45.43	1377	1.078	19.505	-1.378	0.892	4.699	0.914	59.6
1200S250-54[1]	0.0566	50	1.009	3.43	19.681	4.416	0.683	0.823	18.433	2.149	64.34	58.39	1377	1.078	19.505	-1.378	0.892	4.699	0.914	48.3
1200S250-54[1]	0.0566	57	1.009	3.43	19.681	4.416	0.683	0.823	18.054	2.048	69.90	63.07	1377	1.078	19.505	-1.378	0.892	4.699	0.914	45.3
1200S250-68	0.0713	33	1.263	4.30	24.484	4.402	0.836	0.813	23.963	3.496	69.08	62.95	2771	2.141	24.034	-1.362	0.884	4.679	0.915	59.2
1200S250-68	0.0713	50	1.263	4.30	24.484	4.402	0.836	0.813	23.575	3.007	90.04	81.59	2771	2.141	24.034	-1.362	0.884	4.679	0.915	48.1
1200S250-68	0.0713	57	1.263	4.30	24.484	4.402	0.836	0.813	23.445	2.864	97.76	88.32	2771	2.141	24.034	-1.362	0.884	4.679	0.915	45.0
1200S250-97	0.1017	33	1.779	6.05	34.016	4.373	1.121	0.794	34.016	5.496	108.60	102.52	8147	6.134	32.734	-1.329	0.867	4.639	0.918	58.6
1200S250-97	0.1017	50	1.779	6.05	34.016	4.373	1.121	0.794	33.835	5.037	150.82	135.37	8147	6.134	32.734	-1.329	0.867	4.639	0.918	47.5
1200S250-97	0.1017	57	1.779	6.05	34.016	4.373	1.121	0.794	33.655	4.914	167.73	147.23	8147	6.134	32.734	-1.329	0.867	4.639	0.918	44.5
1200S250-118	0.1242	33	2.152	7.32	40.726	4.350	1.307	0.779	40.726	6.788	134.13	133.19	13189	11.065	38.619	-1.305	0.854	4.608	0.920	58.2
1200S250-118	0.1242	50	2.152	7.32	40.726	4.350	1.307	0.779	40.726	6.541	195.84	178.57	14986	11.065	38.619	-1.305	0.854	4.608	0.920	47.1
1200S250-118	0.1242	57	2.152	7.32	40.726	4.350	1.307	0.779	40.726	6.326	215.91	194.95	14986	11.065	38.619	-1.305	0.854	4.608	0.920	44.1
1200S300-54[1]	0.0566	33	1.066	3.63	21.699	4.512	1.074	1.004	21.648	2.736	54.06	47.36	1377	1.138	30.051	-1.743	1.111	4.940	0.876	70.8
1200S300-54[1]	0.0566	50	1.066	3.63	21.699	4.512	1.074	1.004	21.043	2.272	68.04	60.65	1377	1.138	30.051	-1.743	1.111	4.940	0.876	57.4
1200S300-54[1]	0.0566	57	1.066	3.63	21.699	4.512	1.074	1.004	20.498	2.146	73.26	65.45	1377	1.138	30.051	-1.743	1.111	4.940	0.876	53.8
1200S300-68	0.0713	33	1.335	4.54	27.020	4.499	1.320	0.994	26.918	4.064	80.30	65.72	2771	2.262	37.126	-1.726	1.103	4.921	0.877	70.5

1. *Web-height to thickness ratio exceeds 200. Web Stiffeners are required at all support points and concentrated loads.*
* *Allowable Moment includes cold work of forming.*

Table 5: "S" Shape C-Stud and C-Joist Section Properties (continued)

Section	Design Thickness	Fy	Gross Properties						Effective Properties					Torsional Properties						Lu
	(in)	(ksi)	Area (in²)	Weight (lb/ft)	I_{xx} (in⁴)	R_x (in)	I_{yy} (in⁴)	R_y (in)	I_{xxe} (in⁴)	S_{xxe} (in³)	M_{a-L} (in-k)	M_{a-D} (in-k)	V_{ag} (lb)	Jx1000 (in⁴)	C_w (in⁶)	X_o (in)	m (in)	R_o (in)	ß	(in)
1200S300-68	0.0713	50	1.335	4.54	27.020	4.499	1.320	0.994	26.510	3.317	99.32	84.79	2771	2.262	37.126	-1.726	1.103	4.921	0.877	57.2
1200S300-68	0.0713	57	1.335	4.54	27.020	4.499	1.320	0.994	26.422	3.127	106.74	91.67	2771	2.262	37.126	-1.726	1.103	4.921	0.877	53.5
1200S300-97	0.1017	33	1.881	6.40	37.616	4.472	1.786	0.974	37.616	6.035	133.59*	116.06	8147	6.484	50.853	-1.691	1.085	4.880	0.880	66.0
1200S300-97	0.1017	50	1.881	6.40	37.616	4.472	1.786	0.974	37.085	5.831	174.57	141.05	8147	6.484	50.853	-1.691	1.085	4.880	0.880	56.7
1200S300-97	0.1017	57	1.881	6.40	37.616	4.472	1.786	0.974	36.887	5.689	194.16	153.13	8147	6.484	50.853	-1.691	1.085	4.880	0.880	53.0
1200S300-118	0.1242	33	2.276	7.75	45.106	4.452	2.095	0.959	45.106	7.323	165.76*	154.65	13189	11.704	60.251	-1.666	1.071	4.849	0.882	64.9
1200S300-118	0.1242	50	2.276	7.75	45.106	4.452	2.095	0.959	44.727	7.232	243.67*	201.68	14986	11.704	60.251	-1.666	1.071	4.849	0.882	53.0
1200S300-118	0.1242	57	2.276	7.75	45.106	4.452	2.095	0.959	44.678	7.230	246.78	203.36	14986	11.704	60.251	-1.666	1.071	4.849	0.882	52.7
1200S350-54[1]	0.0566	33	1.165	3.96	24.860	4.620	1.866	1.266	24.610	3.295	65.12	58.95	1377	1.244	54.279	-2.363	1.478	5.341	0.804	88.0
1200S350-54[1]	0.0566	50	1.165	3.96	24.860	4.620	1.866	1.266	24.087	2.787	83.46	75.92	1377	1.244	54.279	-2.363	1.478	5.341	0.804	71.4
1200S350-54[1]	0.0566	57	1.165	3.96	24.860	4.620	1.866	1.266	23.413	2.646	90.33	82.04	1377	1.244	54.279	-2.363	1.478	5.341	0.804	66.9
1200S350-68	0.0713	33	1.460	4.97	30.996	4.608	2.306	1.257	30.996	4.908	96.98	80.83	2771	2.473	67.251	-2.346	1.469	5.322	0.806	87.7
1200S350-68	0.0713	50	1.460	4.97	30.996	4.608	2.306	1.257	30.916	4.061	121.59	104.89	2771	2.473	67.251	-2.346	1.469	5.322	0.806	71.2
1200S350-68	0.0713	57	1.460	4.97	30.996	4.608	2.306	1.257	30.754	3.812	130.10	113.58	2771	2.473	67.251	-2.346	1.469	5.322	0.806	66.7
1200S350-97	0.1017	33	2.059	7.01	43.269	4.584	3.159	1.239	43.269	7.071	154.22*	138.56	8147	7.098	92.672	-2.310	1.450	5.281	0.809	83.0
1200S350-97	0.1017	50	2.059	7.01	43.269	4.584	3.159	1.239	43.269	6.590	197.31	170.84	8147	7.098	92.672	-2.310	1.450	5.281	0.809	70.8
1200S350-97	0.1017	57	2.059	7.01	43.269	4.584	3.159	1.239	43.269	6.387	218.01	185.76	8147	7.098	92.672	-2.310	1.450	5.281	0.809	66.3
1200S350-118	0.1242	33	2.494	8.48	51.992	4.566	3.741	1.225	51.992	8.665	192.74*	181.90	13189	12.821	110.302	-2.284	1.436	5.250	0.811	81.9
1200S350-118	0.1242	50	2.494	8.48	51.992	4.566	3.741	1.225	51.992	8.260	274.07*	238.96	14986	12.821	110.302	-2.284	1.436	5.250	0.811	66.9
1200S350-118	0.1242	57	2.494	8.48	51.992	4.566	3.741	1.225	51.992	8.226	280.75	243.44	14986	12.821	110.302	-2.284	1.436	5.250	0.811	66.0
1400S162-54[1]	0.0566	33	1.009	3.43	23.302	4.805	0.218	0.464	21.103	2.496	49.32	40.86	1177	1.078	8.980	-0.667	0.454	4.873	0.981	36.6
1400S162-54[1]	0.0566	50	1.009	3.43	23.302	4.805	0.218	0.464	20.365	2.256	67.54	52.13	1177	1.078	8.980	-0.667	0.454	4.873	0.981	29.7
1400S162-54[1]	0.0566	57	1.009	3.43	23.302	4.805	0.218	0.464	20.156	2.164	73.88	56.20	1177	1.078	8.980	-0.667	0.454	4.873	0.981	27.8
1400S162-68	0.0713	33	1.263	4.30	28.952	4.787	0.262	0.456	27.357	3.357	66.33	57.96	2365	2.141	10.966	-0.654	0.447	4.853	0.982	36.2
1400S162-68	0.0713	50	1.263	4.30	28.952	4.787	0.262	0.456	26.375	3.135	93.85	74.56	2365	2.141	10.966	-0.654	0.447	4.853	0.982	29.4
1400S162-68	0.0713	57	1.263	4.30	28.952	4.787	0.262	0.456	26.093	3.030	103.41	80.54	2365	2.141	10.966	-0.654	0.447	4.853	0.982	27.5
1400S162-97	0.1017	33	1.779	6.05	40.115	4.748	0.340	0.437	39.965	5.248	103.71	97.69	6939	6.134	14.651	-0.628	0.433	4.810	0.983	35.3
1400S162-97	0.1017	50	1.779	6.05	40.115	4.748	0.340	0.437	38.897	4.915	147.14	127.96	6939	6.134	14.651	-0.628	0.433	4.810	0.983	28.7
1400S162-97	0.1017	57	1.779	6.05	40.115	4.748	0.340	0.437	38.515	4.810	164.18	138.89	6939	6.134	14.651	-0.628	0.433	4.810	0.983	26.8
1400S162-118	0.1242	33	2.152	7.32	47.928	4.719	0.385	0.423	47.928	6.659	131.59	129.07	12745	11.065	17.032	-0.609	0.422	4.777	0.984	34.7
1400S162-118	0.1242	50	2.152	7.32	47.928	4.719	0.385	0.423	47.772	6.282	188.07	171.63	12745	11.065	17.032	-0.609	0.422	4.777	0.984	28.1
1400S162-118	0.1242	57	2.152	7.32	47.928	4.719	0.385	0.423	47.406	6.157	210.14	186.99	12745	11.065	17.032	-0.609	0.422	4.777	0.984	26.3
1400S200-54[1]	0.0566	33	1.066	3.63	25.951	4.935	0.406	0.617	23.767	2.866	56.63	48.18	1177	1.138	16.355	-0.946	0.633	5.062	0.965	47.0
1400S200-54[1]	0.0566	50	1.066	3.63	25.951	4.935	0.406	0.617	23.199	2.440	73.05	61.67	1177	1.138	16.355	-0.946	0.633	5.062	0.965	38.2
1400S200-54[1]	0.0566	57	1.066	3.63	25.951	4.935	0.406	0.617	23.025	2.315	79.02	66.54	1177	1.138	16.355	-0.946	0.633	5.062	0.965	35.8
1400S200-68	0.0713	33	1.335	4.54	32.284	4.918	0.494	0.608	30.684	3.824	75.56	67.50	2365	2.262	20.083	-0.932	0.625	5.043	0.966	46.7
1400S200-68	0.0713	50	1.335	4.54	32.284	4.918	0.494	0.608	29.797	3.505	104.93	87.10	2365	2.262	20.083	-0.932	0.625	5.043	0.966	37.9
1400S200-68	0.0713	57	1.335	4.54	32.284	4.918	0.494	0.608	29.549	3.362	114.74	94.18	2365	2.262	20.083	-0.932	0.625	5.043	0.966	35.5
1400S200-97	0.1017	33	1.881	6.40	44.853	4.883	0.655	0.590	44.683	5.917	116.93	111.87	6939	6.484	27.156	-0.904	0.609	5.001	0.967	45.9
1400S200-97	0.1017	50	1.881	6.40	44.853	4.883	0.655	0.590	43.616	5.580	167.07	146.98	6939	6.484	27.156	-0.904	0.609	5.001	0.967	37.3
1400S200-97	0.1017	57	1.881	6.40	44.853	4.883	0.655	0.590	43.238	5.475	186.87	159.65	6939	6.484	27.156	-0.904	0.609	5.001	0.967	34.9
1400S200-118	0.1242	33	2.276	7.75	53.698	4.857	0.755	0.576	53.698	7.480	147.81	146.71	12745	11.704	31.861	-0.883	0.598	4.970	0.968	45.4
1400S200-118	0.1242	50	2.276	7.75	53.698	4.857	0.755	0.576	53.520	7.096	212.47	195.62	12745	11.704	31.861	-0.883	0.598	4.970	0.968	36.8
1400S200-118	0.1242	57	2.276	7.75	53.698	4.857	0.755	0.576	53.150	6.970	237.90	213.28	12745	11.704	31.861	-0.883	0.598	4.970	0.968	34.4
1400S250-54[1]	0.0566	33	1.122	3.82	28.702	5.057	0.707	0.794	26.758	2.927	57.83	52.08	1177	1.198	27.675	-1.272	0.835	5.275	0.942	58.6
1400S250-54[1]	0.0566	50	1.122	3.82	28.702	5.057	0.707	0.794	26.141	2.527	75.65	66.58	1177	1.198	27.675	-1.272	0.835	5.275	0.942	47.6
1400S250-54[1]	0.0566	57	1.122	3.82	28.702	5.057	0.707	0.794	25.545	2.406	82.14	71.82	1177	1.198	27.675	-1.272	0.835	5.275	0.942	44.6
1400S250-68	0.0713	33	1.406	4.78	35.743	5.042	0.865	0.784	34.239	4.145	81.90	72.82	2365	2.383	34.118	-1.257	0.827	5.255	0.943	58.3
1400S250-68	0.0713	50	1.406	4.78	35.743	5.042	0.865	0.784	33.565	3.550	106.29	93.79	2365	2.383	34.118	-1.257	0.827	5.255	0.943	47.3
1400S250-68	0.0713	57	1.406	4.78	35.743	5.042	0.865	0.784	33.351	3.378	115.30	101.36	2365	2.383	34.118	-1.257	0.827	5.255	0.943	44.3
1400S250-97	0.1017	33	1.983	6.75	49.764	5.010	1.160	0.765	49.579	6.611	130.64	120.65	6939	6.835	46.520	-1.225	0.811	5.214	0.945	57.6
1400S250-97	0.1017	50	1.983	6.75	49.764	5.010	1.160	0.765	48.650	6.010	179.95	157.94	6939	6.835	46.520	-1.225	0.811	5.214	0.945	46.7
1400S250-97	0.1017	57	1.983	6.75	49.764	5.010	1.160	0.765	48.313	5.851	199.71	171.40	6939	6.835	46.520	-1.225	0.811	5.214	0.945	43.7
1400S250-118	0.1242	33	2.400	8.17	59.676	4.986	1.352	0.750	59.676	8.330	164.61	158.62	12745	12.342	54.927	-1.203	0.798	5.184	0.946	57.1
1400S250-118	0.1242	50	2.400	8.17	59.676	4.986	1.352	0.750	59.504	7.881	235.94	210.42	12745	12.342	54.927	-1.203	0.798	5.184	0.946	46.2
1400S250-118	0.1242	57	2.400	8.17	59.676	4.986	1.352	0.750	59.201	7.599	259.37	229.12	12745	12.342	54.927	-1.203	0.798	5.184	0.946	43.3
1400S300-54[1]	0.0566	33	1.179	4.01	31.453	5.165	1.115	0.972	29.581	3.019	59.66	54.74	1177	1.259	42.690	-1.617	1.046	5.499	0.914	69.9
1400S300-54[1]	0.0566	50	1.179	4.01	31.453	5.165	1.115	0.972	27.227	2.580	77.25	69.82	1177	1.259	42.690	-1.617	1.046	5.499	0.914	56.8
1400S300-54[1]	0.0566	57	1.179	4.01	31.453	5.165	1.115	0.972	26.551	2.451	83.66	75.26	1177	1.259	42.690	-1.617	1.046	5.499	0.914	53.2
1400S300-68	0.0713	33	1.477	5.03	39.201	5.151	1.370	0.963	37.902	4.236	83.71	76.51	2365	2.503	52.772	-1.601	1.038	5.480	0.915	69.6
1400S300-68	0.0713	50	1.477	5.03	39.201	5.151	1.370	0.963	36.290	3.655	109.42	98.25	2365	2.503	52.772	-1.601	1.038	5.480	0.915	56.5
1400S300-68	0.0713	57	1.477	5.03	39.201	5.151	1.370	0.963	35.846	3.485	118.96	106.09	2365	2.503	52.772	-1.601	1.038	5.480	0.915	52.9
1400S300-97	0.1017	33	2.084	7.09	54.675	5.122	1.854	0.943	54.574	7.035	139.02	126.99	6939	7.186	72.365	-1.568	1.020	5.439	0.917	68.9
1400S300-97	0.1017	50	2.084	7.09	54.675	5.122	1.854	0.943	53.226	6.372	190.78	165.45	6939	7.186	72.365	-1.568	1.020	5.439	0.917	55.9
1400S300-97	0.1017	57	2.084	7.09	54.675	5.122	1.854	0.943	52.492	6.072	207.25	179.32	6939	7.186	72.365	-1.568	1.020	5.439	0.917	52.3
1400S300-118	0.1242	33	2.525	8.59	65.655	5.100	2.174	0.928	65.655	9.046	178.75	167.53	12745	12.981	85.812	-1.544	1.008	5.408	0.919	68.5
1400S300-118	0.1242	50	2.525	8.59	65.655	5.100	2.174	0.928	65.570	8.427	252.29	220.81	12745	12.981	85.812	-1.544	1.008	5.408	0.919	55.5
1400S300-118	0.1242	57	2.525	8.59	65.655	5.100	2.174	0.928	65.077	8.274	282.39	240.03	12745	12.981	85.812	-1.544	1.008	5.408	0.919	51.9
1400S350-54[1]	0.0566	33	1.278	4.35	35.830	5.295	1.947	1.234	35.659	3.823	75.54	68.80	1177	1.365	76.252	-2.207	1.400	5.868	0.859	87.1
1400S350-54[1]	0.0566	50	1.278	4.35	35.830	5.295	1.947	1.234	33.308	3.249	97.27	88.25	1177	1.365	76.252	-2.207	1.400	5.868	0.859	70.7
1400S350-54[1]	0.0566	57	1.278	4.35	35.830	5.295	1.947	1.234	32.395	3.087	105.38	95.27	1177	1.365	76.252	-2.207	1.400	5.868	0.859	66.2
1400S350-68	0.0713	33	1.602	5.45	44.707	5.283	2.406	1.226	44.707	5.700	112.64	94.81	2365	2.715	94.534	-2.190	1.391	5.848	0.860	86.8
1400S350-68	0.0713	50	1.602	5.45	44.707	5.283	2.406	1.226	44.707	4.709	141.00	122.49	2365	2.715	94.534	-2.190	1.391	5.848	0.860	70.4

1. *Web-height to thickness ratio exceeds 200. Web Stiffeners are required at all support points and concentrated loads.*
* *Allowable Moment includes cold work of forming.*

Table 5: "S" Shape C-Stud and C-Joist Section Properties (continued)

Section	Design Thickness	Fy	Gross Properties						Effective Properties					Torsional Properties						Lu
			Area	Weight	I_{xx}	R_x	I_{yy}	R_y	I_{xxe}	S_{xxe}	$M_{a\text{-}L}$	$M_{a\text{-}D}$	V_{ag}	Jx1000	C_w	X_o	m	R_o	ß	
	(in)	(ksi)	(in²)	(lb/ft)	(in⁴)	(in)	(in⁴)	(in)	(in⁴)	(in³)	(in-k)	(in-k)	(lb)	(in⁴)	(in⁶)	(in)	(in)	(in)		(in)
1400S350-68	0.0713	57	1.602	5.45	44.707	5.283	2.406	1.226	44.581	4.429	151.17	132.47	2365	2.715	94.534	-2.190	1.391	5.848	0.860	66.0
1400S350-97	0.1017	33	2.262	7.70	62.507	5.257	3.296	1.207	62.507	8.762	191.08*	163.95	6939	7.799	130.430	-2.156	1.373	5.808	0.862	82.0
1400S350-97	0.1017	50	2.262	7.70	62.507	5.257	3.296	1.207	62.507	8.189	245.18	201.25	6939	7.799	130.430	-2.156	1.373	5.808	0.862	70.0
1400S350-97	0.1017	57	2.262	7.70	62.507	5.257	3.296	1.207	62.507	7.583	258.83	218.49	6939	7.799	130.430	-2.156	1.373	5.808	0.862	65.5
1400S350-118	0.1242	33	2.742	9.33	75.200	5.237	3.903	1.193	75.200	10.743	238.95*	216.66	12745	14.099	155.387	-2.130	1.360	5.778	0.864	80.9
1400S350-118	0.1242	50	2.742	9.33	75.200	5.237	3.903	1.193	75.200	10.260	340.44*	282.84	12745	14.099	155.387	-2.130	1.360	5.778	0.864	66.1
1400S350-118	0.1242	57	2.742	9.33	75.200	5.237	3.903	1.193	75.200	10.220	348.83	288.04	12745	14.099	155.387	-2.130	1.360	5.778	0.864	65.2
1600S162-68[1]	0.0713	33	1.406	4.78	40.913	5.394	0.268	0.436	37.533	3.896	76.99	64.10	2062	2.383	14.816	-0.601	0.415	5.445	0.988	35.2
1600S162-68[1]	0.0713	50	1.406	4.78	40.913	5.394	0.268	0.436	35.986	3.624	108.49	81.87	2062	2.383	14.816	-0.601	0.415	5.445	0.988	28.6
1600S162-68[1]	0.0713	57	1.406	4.78	40.913	5.394	0.268	0.436	35.552	3.498	119.40	88.29	2062	2.383	14.816	-0.601	0.415	5.445	0.988	26.8
1600S162-97	0.1017	33	1.983	6.75	56.824	5.354	0.347	0.418	55.563	6.173	121.97	110.13	6043	6.835	19.807	-0.577	0.401	5.401	0.989	34.4
1600S162-97	0.1017	50	1.983	6.75	56.824	5.354	0.347	0.418	53.725	5.738	171.79	142.80	6043	6.835	19.807	-0.577	0.401	5.401	0.989	27.9
1600S162-97	0.1017	57	1.983	6.75	56.824	5.354	0.347	0.418	53.094	5.606	191.33	154.60	6043	6.835	19.807	-0.577	0.401	5.401	0.989	26.1
1600S162-118	0.1242	33	2.400	8.17	68.014	5.323	0.393	0.405	68.014	7.920	156.50	147.57	11088	12.342	23.035	-0.559	0.391	5.368	0.989	33.7
1600S162-118	0.1242	50	2.400	8.17	68.014	5.323	0.393	0.405	66.535	7.399	221.51	193.72	11088	12.342	23.035	-0.559	0.391	5.368	0.989	27.3
1600S162-118	0.1242	57	2.400	8.17	68.014	5.323	0.393	0.405	65.881	7.233	246.87	210.39	11088	12.342	23.035	-0.559	0.391	5.368	0.989	25.6
1600S200-68[1]	0.0713	33	1.477	5.03	45.291	5.537	0.506	0.585	41.916	4.431	87.56	75.11	2062	2.503	27.155	-0.862	0.584	5.634	0.977	45.7
1600S200-68[1]	0.0713	50	1.477	5.03	45.291	5.537	0.506	0.585	40.523	4.045	121.11	96.27	2062	2.503	27.155	-0.862	0.584	5.634	0.977	37.1
1600S200-68[1]	0.0713	57	1.477	5.03	45.291	5.537	0.506	0.585	40.142	3.876	132.29	103.91	2062	2.503	27.155	-0.862	0.584	5.634	0.977	34.7
1600S200-97	0.1017	33	2.084	7.09	63.050	5.500	0.670	0.567	61.757	6.938	137.10	126.78	6043	7.186	36.744	-0.835	0.569	5.592	0.978	44.9
1600S200-97	0.1017	50	2.084	7.09	63.050	5.500	0.670	0.567	59.933	6.500	194.61	164.99	6043	7.186	36.744	-0.835	0.569	5.592	0.978	36.4
1600S200-97	0.1017	57	2.084	7.09	63.050	5.500	0.670	0.567	59.310	6.367	217.30	178.78	6043	7.186	36.744	-0.835	0.569	5.592	0.978	34.1
1600S200-118	0.1242	33	2.525	8.59	75.601	5.472	0.773	0.553	75.601	8.859	175.05	168.39	11088	12.981	43.132	-0.815	0.558	5.560	0.979	44.3
1600S200-118	0.1242	50	2.525	8.59	75.601	5.472	0.773	0.553	74.084	8.331	249.44	221.86	11088	12.981	43.132	-0.815	0.558	5.560	0.979	35.9
1600S200-118	0.1242	57	2.525	8.59	75.601	5.472	0.773	0.553	73.432	8.164	278.65	241.16	11088	12.981	43.132	-0.815	0.558	5.560	0.979	33.6
1600S250-68[1]	0.0713	33	1.549	5.27	49.814	5.672	0.889	0.758	46.607	4.792	94.70	81.69	2062	2.624	46.230	-1.167	0.778	5.840	0.960	57.3
1600S250-68[1]	0.0713	50	1.549	5.27	49.814	5.672	0.889	0.758	45.550	4.092	122.51	104.63	2062	2.624	46.230	-1.167	0.778	5.840	0.960	46.5
1600S250-68[1]	0.0713	57	1.549	5.27	49.814	5.672	0.889	0.758	45.215	3.891	132.80	112.91	2062	2.624	46.230	-1.167	0.778	5.840	0.960	43.6
1600S250-97	0.1017	33	2.186	7.44	69.476	5.638	1.192	0.738	68.160	7.728	152.72	137.47	6043	7.536	63.082	-1.138	0.762	5.799	0.962	56.5
1600S250-97	0.1017	50	2.186	7.44	69.476	5.638	1.192	0.738	66.577	6.983	209.06	178.60	6043	7.536	63.082	-1.138	0.762	5.799	0.962	45.9
1600S250-97	0.1017	57	2.186	7.44	69.476	5.638	1.192	0.738	66.023	6.787	231.65	193.45	6043	7.536	63.082	-1.138	0.762	5.799	0.962	42.9
1600S250-118	0.1242	33	2.649	9.01	83.427	5.612	1.389	0.724	83.427	9.827	194.19	182.65	11088	13.620	74.524	-1.116	0.750	5.768	0.963	56.0
1600S250-118	0.1242	50	2.649	9.01	83.427	5.612	1.389	0.724	81.923	9.222	276.12	240.07	11088	13.620	74.524	-1.116	0.750	5.768	0.963	45.4
1600S250-118	0.1242	57	2.649	9.01	83.427	5.612	1.389	0.724	81.395	8.873	302.86	260.80	11088	13.620	74.524	-1.116	0.750	5.768	0.963	42.5
1600S300-68[1]	0.0713	33	1.620	5.51	54.336	5.792	1.411	0.933	51.468	4.892	96.68	86.46	2062	2.745	71.608	-1.494	0.981	6.054	0.939	68.7
1600S300-68[1]	0.0713	50	1.620	5.51	54.336	5.792	1.411	0.933	49.107	4.210	126.04	110.54	2062	2.745	71.608	-1.494	0.981	6.054	0.939	55.8
1600S300-68[1]	0.0713	57	1.620	5.51	54.336	5.792	1.411	0.933	48.448	4.012	136.93	119.23	2062	2.745	71.608	-1.494	0.981	6.054	0.939	52.2
1600S300-97	0.1017	33	2.288	7.78	75.903	5.760	1.909	0.914	74.741	8.203	162.09	145.38	6043	7.887	98.275	-1.463	0.964	6.013	0.941	68.0
1600S300-97	0.1017	50	2.288	7.78	75.903	5.760	1.909	0.914	72.666	7.391	221.28	188.32	6043	7.887	98.275	-1.463	0.964	6.013	0.941	55.1
1600S300-97	0.1017	57	2.288	7.78	75.903	5.760	1.909	0.914	71.530	7.034	240.08	203.82	6043	7.887	98.275	-1.463	0.964	6.013	0.941	51.6
1600S300-118	0.1242	33	2.773	9.44	91.253	5.737	2.239	0.899	91.253	10.637	210.19	193.46	11088	14.258	116.606	-1.439	0.951	5.982	0.942	67.4
1600S300-118	0.1242	50	2.773	9.44	91.253	5.737	2.239	0.899	89.913	9.835	294.48	253.24	11088	14.258	116.606	-1.439	0.951	5.982	0.942	54.7
1600S300-118	0.1242	57	2.773	9.44	91.253	5.737	2.239	0.899	89.273	9.638	328.97	274.82	11088	14.258	116.606	-1.439	0.951	5.982	0.942	51.2
1600S350-68[1]	0.0713	33	1.745	5.94	61.622	5.943	2.490	1.195	58.537	6.041	119.38	108.05	2062	2.957	127.370	-2.055	1.322	6.401	0.897	85.8
1600S350-68[1]	0.0713	50	1.745	5.94	61.622	5.943	2.490	1.195	57.437	5.180	155.08	138.99	2062	2.957	127.370	-2.055	1.322	6.401	0.897	69.7
1600S350-68[1]	0.0713	57	1.745	5.94	61.622	5.943	2.490	1.195	56.611	4.910	167.58	150.16	2062	2.957	127.370	-2.055	1.322	6.401	0.897	65.3
1600S350-97	0.1017	33	2.466	8.39	86.270	5.915	3.410	1.176	84.926	9.771	193.09	176.65	6043	8.501	175.896	-2.022	1.304	6.361	0.899	85.2
1600S350-97	0.1017	50	2.466	8.39	86.270	5.915	3.410	1.176	83.691	8.382	250.96	230.33	6043	8.501	175.896	-2.022	1.304	6.361	0.899	69.1
1600S350-97	0.1017	57	2.466	8.39	86.270	5.915	3.410	1.176	83.315	7.931	270.70	249.70	6043	8.501	175.896	-2.022	1.304	6.361	0.899	64.7
1600S350-118	0.1242	33	2.990	10.18	103.892	5.894	4.038	1.162	103.892	12.367	244.38	231.20	11088	15.376	209.692	-1.998	1.291	6.331	0.900	84.8
1600S350-118	0.1242	50	2.990	10.18	103.892	5.894	4.038	1.162	102.530	11.305	338.47	304.57	11088	15.376	209.692	-1.998	1.291	6.331	0.900	68.8
1600S350-118	0.1242	57	2.990	10.18	103.892	5.894	4.038	1.162	102.001	10.953	373.86	331.06	11088	15.376	209.692	-1.998	1.291	6.331	0.900	64.4

1. *Web-height to thickness ratio exceeds 200. Web Stiffeners are required at all support points and concentrated loads.*
* *Allowable Moment includes cold work of forming.*

Table 6: "T" Shape Track Section Properties

Section	Design Thickness	Gross Properties						Effective Properties												Torsional Properties					
								33 ksi				50 ksi				57 ksi									
		Area	Weight	I_{xx}	R_x	I_{yy}	R_y	I_{xxe}	S_{xxe}	$M_{a\text{-}L}$	V_{ag}	I_{xxe}	S_{xxe}	$M_{a\text{-}L}$	V_{ag}	I_{xxe}	S_{xxe}	$M_{a\text{-}L}$	V_{ag}	Jx1000	C_w	X_o	m	R_o	ß
	(in)	(in^2)	(lb/ft)	(in^4)	(in)	(in^4)	(in)	(in^4)	(in^3)	(in-k)	(lb)	(in^4)	(in^3)	(in-k)	(lb)	(in^4)	(in^3)	(in-k)	(lb)	(in^4)	(in^6)	(in)	(in)	(in)	
162T125-18	0.0188	0.077	0.26	0.041	0.733	0.013	0.411	0.030	0.025	0.50	302	-	-	-	-	-	-	-	-	0.009	0.007	-0.878	0.503	1.215	0.478
162T125-27	0.0283	0.117	0.40	0.063	0.735	0.020	0.410	0.050	0.044	0.87	541	-	-	-	-	-	-	-	-	0.031	0.010	-0.872	0.501	1.211	0.482
162T125-30	0.0312	0.129	0.44	0.070	0.735	0.022	0.409	0.057	0.050	1.00	597	-	-	-	-	-	-	-	-	0.042	0.012	-0.870	0.500	1.210	0.483
162T125-33	0.0346	0.143	0.49	0.077	0.736	0.024	0.408	0.066	0.058	1.15	663	-	-	-	-	-	-	-	-	0.057	0.013	-0.868	0.499	1.209	0.484
250T125-18	0.0188	0.094	0.32	0.103	1.051	0.015	0.400	0.078	0.045	0.90	249	-	-	-	-	-	-	-	-	0.011	0.018	-0.769	0.460	1.362	0.681
250T125-27	0.0283	0.141	0.48	0.157	1.053	0.022	0.398	0.129	0.079	1.56	685	-	-	-	-	-	-	-	-	0.038	0.027	-0.763	0.457	1.360	0.685
250T125-30	0.0312	0.156	0.53	0.173	1.053	0.025	0.397	0.145	0.090	1.77	832	-	-	-	-	-	-	-	-	0.051	0.030	-0.762	0.456	1.359	0.686
250T125-33	0.0346	0.173	0.59	0.192	1.054	0.027	0.397	0.166	0.103	2.03	1024	-	-	-	-	-	-	-	-	0.069	0.033	-0.760	0.456	1.358	0.687
250T125-43	0.0451	0.225	0.77	0.250	1.055	0.035	0.395	0.231	0.147	2.91	1356	-	-	-	-	-	-	-	-	0.153	0.042	-0.755	0.453	1.356	0.690
250T125-54	0.0566	0.282	0.96	0.318	1.062	0.043	0.392	0.310	0.203	4.01	1692	0.297	0.188	5.64	2563	0.292	0.184	6.28	2922	0.301	0.054	-0.749	0.449	1.357	0.696
250T125-68	0.0713	0.355	1.21	0.408	1.072	0.054	0.389	0.408	0.281	5.56	2111	0.402	0.262	7.85	3199	0.397	0.256	8.74	3647	0.602	0.069	-0.740	0.444	1.360	0.704
250T150-27	0.0283	0.156	0.53	0.181	1.078	0.037	0.486	0.139	0.082	1.61	685	-	-	-	-	-	-	-	-	0.042	0.044	-0.976	0.575	1.534	0.595
250T150-30	0.0312	0.172	0.58	0.199	1.078	0.040	0.486	0.157	0.093	1.83	832	-	-	-	-	-	-	-	-	0.056	0.049	-0.975	0.574	1.533	0.595
250T150-33	0.0346	0.190	0.65	0.221	1.079	0.045	0.485	0.179	0.107	2.11	1024	-	-	-	-	-	-	-	-	0.076	0.054	-0.973	0.573	1.532	0.596
250T150-43	0.0451	0.248	0.84	0.289	1.080	0.058	0.483	0.252	0.154	3.03	1356	-	-	-	-	-	-	-	-	0.168	0.070	-0.968	0.570	1.529	0.599
250T150-54	0.0566	0.311	1.06	0.368	1.088	0.072	0.481	0.342	0.213	4.22	1692	0.325	0.197	5.89	2563	0.319	0.192	6.55	2922	0.332	0.089	-0.961	0.566	1.529	0.605
250T150-68	0.0713	0.391	1.33	0.472	1.099	0.089	0.478	0.465	0.299	5.92	2111	0.445	0.276	8.27	3199	0.438	0.269	9.19	3647	0.663	0.114	-0.953	0.561	1.531	0.613
250T200-33	0.0346	0.225	0.76	0.280	1.117	0.097	0.658	0.203	0.112	2.22	1024	-	-	-	-	-	-	-	-	0.090	0.118	-1.418	0.813	1.921	0.455
250T200-43	0.0451	0.293	1.00	0.366	1.118	0.126	0.657	0.288	0.163	3.21	1356	-	-	-	-	-	-	-	-	0.198	0.153	-1.413	0.810	1.918	0.457
250T200-54	0.0566	0.367	1.25	0.466	1.127	0.157	0.654	0.396	0.228	4.51	1692	0.371	0.209	6.25	2563	0.364	0.203	6.94	2922	0.392	0.195	-1.405	0.806	1.917	0.462
250T200-68	0.0713	0.462	1.57	0.600	1.139	0.196	0.652	0.548	0.324	6.41	2111	0.517	0.296	8.86	3199	0.507	0.288	9.83	3647	0.783	0.251	-1.396	0.800	1.916	0.469
350T125-18	0.0188	0.113	0.38	0.219	1.394	0.016	0.383	0.174	0.063	1.25	175	-	-	-	-	-	-	-	-	0.013	0.038	-0.675	0.418	1.595	0.821
350T125-27	0.0283	0.17	0.58	0.331	1.396	0.025	0.381	0.277	0.128	2.53	590	-	-	-	-	-	-	-	-	0.045	0.057	-0.670	0.416	1.595	0.823
350T125-30	0.0312	0.187	0.64	0.365	1.396	0.027	0.380	0.312	0.145	2.86	790	-	-	-	-	-	-	-	-	0.061	0.063	-0.669	0.415	1.594	0.824
350T125-33	0.0346	0.207	0.71	0.405	1.397	0.030	0.379	0.354	0.165	3.27	1024	-	-	-	-	-	-	-	-	0.083	0.070	-0.668	0.414	1.594	0.824
350T125-43	0.0451	0.270	0.92	0.528	1.397	0.038	0.377	0.490	0.233	4.61	1739	-	-	-	-	-	-	-	-	0.183	0.090	-0.663	0.412	1.592	0.826
350T125-54	0.0566	0.339	1.15	0.668	1.404	0.048	0.375	0.651	0.317	6.26	2392	0.626	0.297	8.89	3372	0.617	0.291	9.94	3600	0.362	0.114	-0.658	0.408	1.595	0.830
350T125-68	0.0713	0.427	1.45	0.851	1.412	0.059	0.372	0.851	0.433	8.55	2994	0.839	0.407	12.18	4536	0.829	0.399	13.62	5171	0.723	0.144	-0.650	0.403	1.599	0.835
350T150-27	0.0283	0.184	0.63	0.377	1.431	0.041	0.470	0.298	0.132	2.62	590	-	-	-	-	-	-	-	-	0.049	0.094	-0.869	0.529	1.739	0.750
350T150-30	0.0312	0.203	0.69	0.416	1.432	0.045	0.469	0.336	0.150	2.96	790	-	-	-	-	-	-	-	-	0.066	0.103	-0.867	0.528	1.739	0.751
350T150-33	0.0346	0.225	0.76	0.461	1.432	0.049	0.469	0.382	0.171	3.39	1024	-	-	-	-	-	-	-	-	0.090	0.114	-0.866	0.527	1.738	0.752
350T150-43	0.0451	0.293	1.00	0.601	1.433	0.064	0.467	0.531	0.243	4.80	1739	-	-	-	-	-	-	-	-	0.198	0.148	-0.861	0.525	1.736	0.754
350T150-54	0.0566	0.367	1.25	0.761	1.440	0.079	0.465	0.712	0.332	6.57	2392	0.679	0.310	9.28	3372	0.669	0.303	10.35	3600	0.392	0.187	-0.855	0.521	1.738	0.758
350T150-68	0.0713	0.462	1.57	0.972	1.450	0.099	0.462	0.957	0.459	9.07	2994	0.919	0.428	12.81	4536	0.906	0.419	14.29	5171	0.783	0.238	-0.847	0.516	1.741	0.763
350T200-33	0.0346	0.259	0.88	0.574	1.487	0.108	0.647	0.428	0.181	3.57	1024	-	-	-	-	-	-	-	-	0.103	0.249	-1.285	0.761	2.069	0.614
350T200-43	0.0451	0.338	1.15	0.749	1.489	0.140	0.645	0.600	0.257	5.09	1739	-	-	-	-	-	-	-	-	0.229	0.323	-1.280	0.758	2.066	0.616
350T200-54	0.0566	0.424	1.44	0.949	1.496	0.175	0.642	0.814	0.355	7.01	2392	0.770	0.329	9.85	3372	0.756	0.322	10.97	3600	0.453	0.409	-1.273	0.754	2.067	0.621
350T200-68	0.0713	0.534	1.82	1.213	1.508	0.218	0.639	1.112	0.496	9.80	2994	1.054	0.458	13.71	4536	1.036	0.447	15.26	5171	0.904	0.522	-1.264	0.749	2.069	0.626
362T125-18	0.0188	0.115	0.39	0.237	1.435	0.017	0.380	0.189	0.065	1.29	169	-	-	-	-	-	-	-	-	0.014	0.042	-0.665	0.413	1.627	0.833
362T125-27	0.0283	0.173	0.59	0.358	1.438	0.025	0.378	0.301	0.135	2.66	569	-	-	-	-	-	-	-	-	0.046	0.062	-0.661	0.411	1.627	0.835
362T125-30	0.0312	0.191	0.65	0.395	1.438	0.027	0.378	0.339	0.152	3.01	762	-	-	-	-	-	-	-	-	0.062	0.068	-0.659	0.410	1.626	0.836
362T125-33	0.0346	0.212	0.72	0.438	1.438	0.030	0.377	0.384	0.174	3.44	1024	-	-	-	-	-	-	-	-	0.085	0.076	-0.658	0.409	1.626	0.836
362T125-43	0.0451	0.276	0.94	0.571	1.439	0.039	0.375	0.531	0.245	4.84	1739	-	-	-	-	-	-	-	-	0.187	0.098	-0.654	0.407	1.625	0.838
362T125-54	0.0566	0.346	1.18	0.723	1.445	0.048	0.373	0.705	0.332	6.57	2480	0.678	0.312	9.34	3372	0.669	0.306	10.44	3600	0.369	0.123	-0.648	0.404	1.627	0.841
362T125-68	0.0713	0.436	1.48	0.921	1.454	0.060	0.370	0.921	0.453	8.95	3104	0.907	0.427	12.78	4703	0.897	0.419	14.29	5362	0.738	0.156	-0.641	0.399	1.631	0.846
362T150-27	0.0283	0.187	0.64	0.408	1.475	0.041	0.468	0.323	0.140	2.76	569	-	-	-	-	-	-	-	-	0.050	0.102	-0.857	0.524	1.769	0.765
362T150-30	0.0312	0.207	0.70	0.449	1.475	0.045	0.467	0.364	0.158	3.12	762	-	-	-	-	-	-	-	-	0.067	0.112	-0.856	0.523	1.768	0.766
362T150-33	0.0346	0.229	0.78	0.499	1.475	0.050	0.467	0.414	0.180	3.56	1024	-	-	-	-	-	-	-	-	0.091	0.124	-0.854	0.522	1.767	0.766
362T150-43	0.0451	0.298	1.02	0.650	1.476	0.064	0.465	0.574	0.255	5.04	1739	-	-	-	-	-	-	-	-	0.202	0.160	-0.850	0.519	1.766	0.768
362T150-54	0.0566	0.374	1.27	0.823	1.483	0.080	0.462	0.769	0.349	6.89	2480	0.735	0.325	9.74	3372	0.724	0.319	10.88	3600	0.400	0.202	-0.844	0.516	1.768	0.772
362T150-68	0.0713	0.471	1.60	1.050	1.492	0.099	0.459	1.034	0.480	9.49	3104	0.993	0.449	13.43	4703	0.979	0.439	14.98	5362	0.799	0.257	-0.836	0.511	1.771	0.777
362T200-33	0.0346	0.264	0.9	0.619	1.532	0.110	0.645	0.464	0.190	3.76	1024	-	-	-	-	-	-	-	-	0.105	0.269	-1.270	0.754	2.092	0.631
362T200-43	0.0451	0.343	1.17	0.808	1.534	0.142	0.643	0.649	0.270	5.34	1739	-	-	-	-	-	-	-	-	0.233	0.350	-1.265	0.752	2.090	0.633
362T200-54	0.0566	0.431	1.47	1.024	1.541	0.177	0.640	0.879	0.372	7.35	2480	0.832	0.345	10.34	3372	0.818	0.338	11.53	3600	0.460	0.442	-1.259	0.748	2.091	0.637
362T200-68	0.0713	0.543	1.85	1.307	1.552	0.221	0.638	1.199	0.519	10.26	3104	1.138	0.480	14.37	4703	1.119	0.469	16.00	5362	0.919	0.564	-1.250	0.743	2.093	0.643

* *Allowable moment includes cold work of forming strength increase in accordance with AISI S100 section A7.*

1. *Web height-to-thickness ratio exceeds 200. Web stiffeners are required at all support and concentrated load locations along the member.*
2. *Web depth for track sections equals nominal depth plus 2 times design thickness plus bend radius. Where the radius is the minimum of 1.5t and 3/32 of an inch.*
3. *Hems on non-structural track sections are ignored.*
4. *For sections with properties listed for 33, 50, and 57 ksi yield points, the required yield point should be specified in the design documents.*
5. *Where effective properties are not listed for a section at 33, 50, or 57 ksi yield, web depth-to-thickness or flange width-to-thickness limits from the AISI S100 are exceeded. The designer shall determine if usage is appropriate for project conditions; gross properties are provided for convenience.*

Table 6: "T" Shape Track Section Properties (continued)

Section	Design Thickness	Gross Properties						Effective Properties												Torsional Properties					
								33 ksi				50 ksi				57 ksi									
		Area	Weight	I_{xx}	R_x	I_{yy}	R_y	I_{xxe}	S_{xxe}	$M_{a\text{-}L}$	V_{ag}	I_{xxe}	S_{xxe}	$M_{a\text{-}L}$	V_{ag}	I_{xxe}	S_{xxe}	$M_{a\text{-}L}$	V_{ag}	Jx1000	C_w	X_o	m	R_o	ß
	(in)	(in^2)	(lb/ft)	(in^4)	(in)	(in^4)	(in)	(in^4)	(in^3)	(in-k)	(lb)	(in^4)	(in^3)	(in-k)	(lb)	(in^4)	(in^3)	(in-k)	(lb)	(in^4)	(in^6)	(in)	(in)	(in)	
400T125-18[1]	0.0188	0.122	0.41	0.297	1.560	0.017	0.374	0.241	0.072	1.42	153	-	-	-	-	-	-	-	-	0.014	0.052	-0.637	0.400	1.726	0.864
400T125-27	0.0283	0.184	0.63	0.449	1.562	0.025	0.372	0.380	0.156	3.08	515	-	-	-	-	-	-	-	-	0.049	0.078	-0.633	0.398	1.726	0.866
400T125-30	0.0312	0.203	0.69	0.495	1.562	0.028	0.371	0.427	0.176	3.49	689	-	-	-	-	-	-	-	-	0.066	0.085	-0.632	0.397	1.726	0.866
400T125-33	0.0346	0.225	0.76	0.549	1.563	0.031	0.371	0.484	0.201	3.97	940	-	-	-	-	-	-	-	-	0.090	0.095	-0.630	0.396	1.725	0.867
400T125-43	0.0451	0.293	1.00	0.716	1.563	0.040	0.369	0.666	0.282	5.57	1739	-	-	-	-	-	-	-	-	0.198	0.122	-0.626	0.394	1.724	0.868
400T125-54	0.0566	0.367	1.25	0.904	1.569	0.049	0.366	0.882	0.381	7.53	2739	0.849	0.359	10.74	3372	0.839	0.352	12.02	3600	0.392	0.154	-0.621	0.390	1.727	0.871
400T125-68	0.0713	0.462	1.57	1.150	1.577	0.061	0.363	1.150	0.517	10.22	3435	1.134	0.488	14.62	5205	1.122	0.479	16.36	5713	0.783	0.194	-0.614	0.386	1.731	0.874
400T150-27	0.0283	0.198	0.67	0.509	1.602	0.042	0.461	0.409	0.154	3.04	515	-	-	-	-	-	-	-	-	0.053	0.127	-0.824	0.509	1.860	0.804
400T150-30	0.0312	0.218	0.74	0.561	1.603	0.046	0.461	0.458	0.183	3.61	689	-	-	-	-	-	-	-	-	0.071	0.140	-0.823	0.508	1.859	0.804
400T150-33	0.0346	0.242	0.82	0.622	1.603	0.051	0.460	0.519	0.208	4.12	940	-	-	-	-	-	-	-	-	0.097	0.155	-0.821	0.507	1.859	0.805
400T150-43	0.0451	0.315	1.07	0.811	1.604	0.066	0.458	0.719	0.293	5.80	1739	-	-	-	-	-	-	-	-	0.214	0.200	-0.817	0.504	1.857	0.807
400T150-54	0.0566	0.396	1.35	1.025	1.610	0.082	0.456	0.960	0.399	7.89	2739	0.918	0.374	11.19	3372	0.905	0.366	12.51	3600	0.422	0.252	-0.811	0.501	1.860	0.810
400T150-68	0.0713	0.498	1.69	1.306	1.619	0.102	0.453	1.286	0.548	10.82	3435	1.237	0.513	15.35	5205	1.220	0.502	17.15	5713	0.844	0.320	-0.804	0.496	1.864	0.814
400T200-33	0.0346	0.277	0.94	0.768	1.666	0.113	0.639	0.581	0.220	4.34	940	-	-	-	-	-	-	-	-	0.110	0.336	-1.229	0.737	2.166	0.678
400T200-43	0.0451	0.36	1.23	1.002	1.668	0.146	0.637	0.811	0.311	6.14	1739	-	-	-	-	-	-	-	-	0.244	0.436	-1.224	0.734	2.164	0.680
400T200-54	0.0566	0.452	1.54	1.268	1.675	0.182	0.635	1.093	0.426	8.42	2739	1.037	0.397	11.88	3372	1.020	0.388	13.25	3600	0.483	0.551	-1.217	0.730	2.165	0.684
400T200-68	0.0713	0.569	1.94	1.617	1.685	0.227	0.632	1.485	0.591	11.68	3435	1.412	0.549	16.42	5205	1.389	0.536	18.30	5713	0.965	0.702	-1.209	0.725	2.168	0.689
550T125-27	0.0283	0.226	0.77	0.948	2.046	0.027	0.348	0.786	0.192	3.79	372	-	-	-	-	-	-	-	-	0.060	0.160	-0.543	0.352	2.145	0.936
550T125-30	0.0312	0.25	0.85	1.045	2.046	0.030	0.347	0.897	0.226	4.47	499	-	-	-	-	-	-	-	-	0.081	0.176	-0.542	0.351	2.145	0.936
550T125-33	0.0346	0.277	0.94	1.159	2.046	0.033	0.346	1.029	0.270	5.33	680	-	-	-	-	-	-	-	-	0.110	0.195	-0.541	0.350	2.145	0.936
550T125-43	0.0451	0.36	1.23	1.510	2.047	0.043	0.344	1.428	0.416	8.23	1504	-	-	-	-	-	-	-	-	0.244	0.252	-0.537	0.348	2.144	0.937
550T125-54	0.0566	0.452	1.54	1.903	2.052	0.053	0.342	1.862	0.597	11.80	2739	1.811	0.535	16.01	2980	1.796	0.514	17.56	2980	0.483	0.315	-0.532	0.345	2.147	0.939
550T125-68	0.0713	0.569	1.94	2.412	2.058	0.066	0.339	2.412	0.807	15.95	4347	2.379	0.769	23.02	5350	2.359	0.746	25.47	5713	0.965	0.397	-0.526	0.341	2.152	0.940
550T150-27	0.0283	0.241	0.82	1.059	2.098	0.046	0.436	0.893	0.207	4.10	372	-	-	-	-	-	-	-	-	0.064	0.263	-0.716	0.456	2.259	0.900
550T150-30	0.0312	0.265	0.90	1.168	2.098	0.050	0.435	0.995	0.251	4.96	499	-	-	-	-	-	-	-	-	0.086	0.289	-0.715	0.455	2.259	0.900
550T150-33	0.0346	0.294	1.00	1.295	2.099	0.055	0.434	1.115	0.310	6.12	680	-	-	-	-	-	-	-	-	0.117	0.320	-0.714	0.455	2.259	0.900
550T150-43	0.0451	0.383	1.30	1.688	2.099	0.072	0.432	1.516	0.468	9.25	1504	-	-	-	-	-	-	-	-	0.260	0.414	-0.709	0.452	2.258	0.901
550T150-54	0.0566	0.48	1.63	2.128	2.105	0.089	0.430	2.005	0.628	12.41	2739	1.928	0.595	17.81	2980	1.905	0.585	19.96	2980	0.513	0.519	-0.704	0.449	2.261	0.903
550T150-68	0.0713	0.605	2.06	2.699	2.112	0.110	0.427	2.660	0.850	16.80	4347	2.569	0.804	24.07	5350	2.539	0.790	26.97	5713	1.025	0.655	-0.698	0.445	2.265	0.905
550T200-33	0.0346	0.329	1.12	1.567	2.184	0.123	0.613	1.246	0.307	6.06	680	-	-	-	-	-	-	-	-	0.131	0.694	-1.088	0.674	2.516	0.813
550T200-43	0.0451	0.428	1.46	2.043	2.185	0.160	0.611	1.690	0.495	9.79	1504	-	-	-	-	-	-	-	-	0.290	0.900	-1.083	0.671	2.514	0.814
550T200-54	0.0566	0.537	1.83	2.578	2.191	0.199	0.609	2.253	0.669	13.21	2739	2.153	0.630	18.86	2980	2.122	0.619	21.12	2980	0.573	1.133	-1.077	0.668	2.517	0.817
550T200-68	0.0713	0.676	2.30	3.274	2.200	0.248	0.606	3.027	0.914	18.06	4347	2.894	0.857	25.67	5350	2.853	0.841	28.71	5713	1.146	1.434	-1.070	0.663	2.521	0.820
600T125-27[1]	0.0283	0.241	0.82	1.168	2.204	0.028	0.340	0.958	0.210	4.16	341	-	-	-	-	-	-	-	-	0.064	0.196	-0.519	0.339	2.290	0.949
600T125-30	0.0312	0.265	0.90	1.288	2.204	0.031	0.340	1.095	0.249	4.92	456	-	-	-	-	-	-	-	-	0.086	0.215	-0.518	0.338	2.289	0.949
600T125-33	0.0346	0.294	1.00	1.428	2.204	0.034	0.339	1.258	0.297	5.87	622	-	-	-	-	-	-	-	-	0.117	0.238	-0.516	0.337	2.289	0.949
600T125-43	0.0451	0.383	1.30	1.861	2.205	0.044	0.337	1.768	0.461	9.11	1377	-	-	-	-	-	-	-	-	0.260	0.307	-0.513	0.335	2.288	0.950
600T125-54	0.0566	0.48	1.63	2.344	2.209	0.054	0.335	2.299	0.666	13.15	2728	2.241	0.592	17.73	2728	2.213	0.569	19.42	2728	0.513	0.384	-0.508	0.332	2.291	0.951
600T125-68	0.0713	0.605	2.06	2.969	2.215	0.067	0.332	2.969	0.916	18.09	4347	2.934	0.858	25.69	5350	2.911	0.831	28.35	5474	1.025	0.483	-0.503	0.329	2.296	0.952
600T125-97	0.1017	0.862	2.93	4.281	2.228	0.092	0.326	4.281	1.347	30.43*	7359	4.281	1.347	40.33	10885	4.281	1.341	45.77	11622	2.973	0.685	-0.491	0.321	2.305	0.955
600T150-27[1]	0.0283	0.255	0.87	1.300	2.260	0.047	0.427	1.011	0.214	4.23	341	-	-	-	-	-	-	-	-	0.068	0.320	-0.686	0.441	2.400	0.918
600T150-30	0.0312	0.281	0.96	1.434	2.260	0.051	0.427	1.159	0.253	5.01	456	-	-	-	-	-	-	-	-	0.091	0.352	-0.685	0.440	2.400	0.918
600T150-33	0.0346	0.311	1.06	1.590	2.260	0.057	0.426	1.334	0.303	5.99	622	-	-	-	-	-	-	-	-	0.124	0.390	-0.684	0.439	2.399	0.919
600T150-43	0.0451	0.405	1.38	2.072	2.261	0.073	0.424	1.890	0.474	9.36	1377	-	-	-	-	-	-	-	-	0.275	0.504	-0.680	0.437	2.398	0.920
600T150-54	0.0566	0.509	1.73	2.611	2.266	0.091	0.422	2.473	0.689	13.62	2728	2.400	0.609	18.24	2728	2.362	0.584	19.93	2728	0.543	0.632	-0.675	0.434	2.401	0.921
600T150-68	0.0713	0.641	2.18	3.309	2.273	0.113	0.419	3.262	0.963	19.03	4347	3.162	0.891	26.68	5350	3.132	0.860	29.36	5474	1.086	0.797	-0.669	0.430	2.406	0.923
600T150-97	0.1017	0.913	3.11	4.778	2.288	0.156	0.413	4.778	1.504	29.71	7359	4.778	1.444	43.23	10885	4.778	1.422	48.53	11622	3.148	1.138	-0.656	0.421	2.415	0.926
600T200-33	0.0346	0.346	1.18	1.913	2.352	0.126	0.604	1.542	0.333	6.59	622	-	-	-	-	-	-	-	-	0.138	0.847	-1.048	0.655	2.645	0.843
600T200-43	0.0451	0.451	1.53	2.494	2.353	0.163	0.602	2.076	0.565	11.16	1377	-	-	-	-	-	-	-	-	0.305	1.098	-1.044	0.652	2.643	0.844
600T200-54	0.0566	0.565	1.92	3.145	2.359	0.203	0.600	2.759	0.759	15.00	2728	2.641	0.717	21.48	2728	2.611	0.694	23.69	2728	0.604	1.381	-1.038	0.649	2.646	0.846
600T200-68	0.0713	0.712	2.42	3.990	2.367	0.254	0.597	3.696	1.034	20.42	4347	3.540	0.973	29.12	5350	3.492	0.955	32.59	5474	1.206	1.746	-1.031	0.644	2.650	0.849
600T200-97	0.1017	1.015	3.45	5.773	2.385	0.354	0.591	5.758	1.667	32.95	7359	5.558	1.568	46.94	10885	5.490	1.538	52.49	11622	3.499	2.510	-1.016	0.635	2.659	0.854
800T125-33[1]	0.0346	0.363	1.24	2.895	2.824	0.036	0.313	2.441	0.407	8.03	465	-	-	-	-	-	-	-	-	0.145	0.456	-0.439	0.294	2.875	0.977
800T125-43	0.0451	0.473	1.61	3.773	2.824	0.046	0.311	3.484	0.640	12.65	1030	-	-	-	-	-	-	-	-	0.321	0.589	-0.436	0.292	2.874	0.977
800T125-54	0.0566	0.594	2.02	4.745	2.827	0.057	0.309	4.668	0.940	18.58	2039	4.426	0.824	24.66	2039	4.341	0.788	26.90	2039	0.634	0.735	-0.432	0.289	2.877	0.977
800T125-68	0.0713	0.748	2.54	5.998	2.833	0.070	0.306	5.998	1.356	26.80	4087	5.956	1.216	36.39	4087	5.872	1.170	39.93	4087	1.267	0.920	-0.427	0.286	2.881	0.978
800T125-97	0.1017	1.066	3.63	8.613	2.843	0.096	0.301	8.613	2.062	40.74	8843	8.613	2.062	61.72	10885	8.613	2.032	69.37	11622	3.674	1.296	-0.417	0.279	2.889	0.979

* *Allowable moment includes cold work of forming strength increase in accordance with AISI S100 section A7.*

1. *Web height-to-thickness ratio exceeds 200. Web stiffeners are required at all support and concentrated load locations along the member.*
2. *Web depth for track sections equals nominal depth plus 2 times design thickness plus bend radius. Where the radius is the minimum of 1.5t and 3/32 of an inch.*
3. *Hems on non-structural track sections are ignored.*
4. *For sections with properties listed for 33, 50, and 57 ksi yield points, the required yield point should be specified in the design documents.*
5. *Where effective properties are not listed for a section at 33, 50, or 57 ksi yield, web depth-to-thickness or flange width-to-thickness limits from the AISI S100 are exceeded. The designer shall determine if usage is appropriate for project conditions; gross properties are provided for convenience.*

Table 6: "T" Shape Track Section Properties (continued)

Section	Design Thickness	Gross Properties						Effective Properties												Torsional Properties					
								33 ksi				50 ksi				57 ksi									
		Area	Weight	I_{xx}	R_x	I_{yy}	R_y	I_{xxe}	S_{xxe}	$M_{a\text{-}L}$	V_{ag}	I_{xxe}	S_{xxe}	$M_{a\text{-}L}$	V_{ag}	I_{xxe}	S_{xxe}	$M_{a\text{-}L}$	V_{ag}	Jx1000	C_w	X_o	m	R_o	ß
	(in)	(in^2)	(lb/ft)	(in^4)	(in)	(in^4)	(in)	(in^4)	(in^3)	(in-k)	(lb)	(in^4)	(in^3)	(in-k)	(lb)	(in^4)	(in^3)	(in-k)	(lb)	(in^4)	(in^6)	(in)	(in)	(in)	
800T150-33[1]	0.0346	0.38	1.29	3.180	2.891	0.060	0.397	2.569	0.414	8.18	465	-	-	-	-	-	-	-	-	0.152	0.751	-0.588	0.388	2.977	0.961
800T150-43	0.0451	0.496	1.69	4.144	2.891	0.077	0.395	3.689	0.655	12.95	1030	-	-	-	-	-	-	-	-	0.336	0.972	-0.584	0.386	2.976	0.961
800T150-54	0.0566	0.622	2.12	5.214	2.896	0.096	0.393	4.976	0.969	19.15	2039	4.692	0.844	25.27	2039	4.594	0.806	27.51	2039	0.664	1.215	-0.580	0.383	2.979	0.962
800T150-68	0.0713	0.783	2.67	6.594	2.902	0.119	0.390	6.527	1.412	27.91	4087	6.361	1.255	37.58	4087	6.258	1.205	41.14	4087	1.327	1.526	-0.575	0.379	2.984	0.963
800T150-97	0.1017	1.116	3.80	9.479	2.914	0.165	0.384	9.479	2.269	44.83	8843	9.479	2.192	65.62	10885	9.479	2.133	72.80	11622	3.849	2.162	-0.564	0.372	2.993	0.965
800T200-33[1]	0.0346	0.415	1.41	3.749	3.005	0.135	0.571	2.788	0.424	8.37	465	-	-	-	-	-	-	-	-	0.166	1.638	-0.917	0.589	3.194	0.918
800T200-43	0.0451	0.541	1.84	4.887	3.006	0.175	0.569	4.043	0.676	13.35	1030	-	-	-	-	-	-	-	-	0.367	2.124	-0.913	0.587	3.193	0.918
800T200-54	0.0566	0.679	2.31	6.152	3.011	0.218	0.567	5.505	1.009	19.93	2039	5.149	0.871	26.09	2039	5.029	0.831	28.35	2039	0.725	2.664	-0.908	0.584	3.196	0.919
800T200-68	0.0713	0.854	2.91	7.786	3.019	0.272	0.564	7.306	1.490	29.45	4087	7.051	1.310	39.22	4087	6.919	1.254	42.81	4087	1.448	3.357	-0.902	0.580	3.201	0.921
800T200-97	0.1017	1.218	4.15	11.212	3.034	0.379	0.558	11.176	2.491	49.22	8843	10.833	2.347	70.27	10885	10.733	2.271	77.52	11622	4.200	4.792	-0.889	0.571	3.210	0.923
1000T125-43[1]	0.0451	0.563	1.92	6.630	3.431	0.047	0.290	5.886	0.819	16.19	822	-	-	-	-	-	-	-	-	0.382	0.973	-0.379	0.259	3.464	0.988
1000T125-54	0.0566	0.707	2.41	8.333	3.434	0.059	0.288	7.960	1.216	24.03	1628	7.479	1.055	31.59	1628	7.313	1.007	34.37	1628	0.755	1.212	-0.376	0.256	3.466	0.988
1000T125-68	0.0713	0.890	3.03	10.522	3.438	0.073	0.286	10.452	1.781	35.19	3261	10.155	1.575	47.15	3261	9.982	1.510	51.55	3261	1.508	1.515	-0.372	0.253	3.470	0.989
1000T125-97	0.1017	1.269	4.32	15.077	3.447	0.100	0.280	15.077	2.907	57.44	8843	15.077	2.753	82.42	9507	15.077	2.688	91.76	9507	4.375	2.123	-0.363	0.247	3.477	0.989
1000T150-43[1]	0.0451	0.586	1.99	7.207	3.507	0.080	0.370	6.195	0.837	16.54	822	-	-	-	-	-	-	-	-	0.397	1.612	-0.513	0.345	3.564	0.979
1000T150-54	0.0566	0.735	2.50	9.061	3.511	0.100	0.368	8.430	1.249	24.69	1628	7.880	1.079	32.29	1628	7.692	1.028	35.09	1628	0.785	2.013	-0.509	0.342	3.567	0.980
1000T150-68	0.0713	0.926	3.15	11.445	3.516	0.124	0.366	11.342	1.846	36.48	3261	10.774	1.621	48.53	3261	10.573	1.552	52.96	3261	1.569	2.522	-0.505	0.339	3.571	0.980
1000T150-97	0.1017	1.320	4.49	16.413	3.526	0.171	0.360	16.413	3.165	62.54	8843	16.413	2.902	86.90	9507	16.413	2.807	95.82	9507	4.550	3.557	-0.495	0.332	3.579	0.981
1000T200-43[1]	0.0451	0.631	2.15	8.361	3.640	0.183	0.539	6.722	0.861	17.01	822	-	-	-	-	-	-	-	-	0.428	3.540	-0.813	0.534	3.769	0.953
1000T200-54	0.0566	0.792	2.69	10.516	3.645	0.228	0.537	9.231	1.295	25.60	1628	8.560	1.111	33.26	1628	8.338	1.057	36.07	1628	0.845	4.434	-0.809	0.531	3.772	0.954
1000T200-68	0.0713	0.997	3.39	13.292	3.651	0.284	0.534	12.551	1.936	38.26	3261	11.820	1.684	50.42	3261	11.568	1.608	54.89	3261	1.690	5.576	-0.803	0.527	3.776	0.955
1000T200-97	0.1017	1.422	4.84	19.087	3.664	0.397	0.528	19.031	3.427	67.72	8843	18.583	3.081	92.25	9507	18.439	2.968	101.30	9507	4.901	7.924	-0.791	0.519	3.786	0.956
1200T125-54[1]	0.0566	0.82	2.79	13.335	4.033	0.060	0.271	12.296	1.491	29.47	1354	11.460	1.286	38.51	1354	11.177	1.226	41.83	1354	0.876	1.820	-0.333	0.230	4.055	0.993
1200T125-68	0.0713	1.033	3.51	16.826	4.036	0.074	0.268	16.246	2.206	43.60	2713	15.686	1.934	57.90	2713	15.384	1.850	63.16	2713	1.750	2.270	-0.329	0.227	4.059	0.993
1200T125-97	0.1017	1.472	5.01	24.078	4.044	0.102	0.263	24.078	3.690	72.92	7902	23.751	3.442	103.06	7902	23.530	3.348	114.29	7902	5.076	3.171	-0.322	0.222	4.065	0.994
1200T150-54[1]	0.0566	0.848	2.89	14.378	4.117	0.103	0.348	12.962	1.530	30.23	1354	12.020	1.313	39.31	1354	11.705	1.250	42.65	1354	0.906	3.033	-0.454	0.310	4.156	0.988
1200T150-68	0.0713	1.068	3.64	18.148	4.121	0.127	0.345	17.568	2.281	45.08	2713	16.566	1.987	59.48	2713	16.216	1.898	64.77	2713	1.810	3.795	-0.450	0.307	4.160	0.988
1200T150-97	0.1017	1.523	5.18	25.987	4.130	0.176	0.340	25.987	3.996	78.97	7902	25.719	3.616	108.27	7902	25.526	3.485	118.97	7902	5.252	5.335	-0.441	0.301	4.168	0.989
1200T200-54[1]	0.0566	0.905	3.08	16.464	4.265	0.236	0.510	14.078	1.582	31.26	1354	12.962	1.350	40.41	1354	12.596	1.283	43.78	1354	0.966	6.714	-0.730	0.487	4.357	0.972
1200T200-68	0.0713	1.140	3.88	20.791	4.271	0.294	0.508	19.277	2.383	47.09	2713	18.026	2.058	61.62	2713	17.600	1.962	66.96	2713	1.931	8.431	-0.725	0.483	4.362	0.972
1200T200-97	0.1017	1.625	5.53	29.805	4.283	0.410	0.502	29.805	4.298	84.93	7902	28.959	3.819	114.35	7902	28.495	3.667	125.18	7902	5.602	11.945	-0.714	0.476	4.371	0.973

* *Allowable moment includes cold work of forming strength increase in accordance with AISI S100 section A7.*

1. *Web height-to-thickness ratio exceeds 200. Web stiffeners are required at all support and concentrated load locations along the member.*
2. *Web depth for track sections equals nominal depth plus 2 times design thickness plus bend radius. Where the radius is the minimum of 1.5t and 3/32 of an inch.*
3. *Hems on non-structural track sections are ignored.*
4. *For sections with properties listed for 33, 50, and 57 ksi yield points, the required yield point should be specified in the design documents.*
5. *Where effective properties are not listed for a section at 33, 50, or 57 ksi yield, web depth-to-thickness or flange width-to-thickness limits from the AISI S100 are exceeded. The designer shall determine if usage is appropriate for project conditions; gross properties are provided for convenience.*

Table 7: Allowable Web Crippling Loads - Single Members

Section Depth	Designation	Design Thickness (in)	Fy (ksi)	Condition 1				Condition 2				Condition 3				Condition 4			
				Bearing Length (in)				Bearing Length (in)				Bearing Length (in)				Bearing Length (in)			
				1	3.5	4	6	1	3.5	4	6	1	3.5	4	6	1	3.5	4	6
162	S__-18	0.0188	33	55	89 [1]	- [1,2]	- [1,2]	87	125 [1]	- [1,2]	- [1,2]	45	64 [1]	- [1,2]	- [1,2]	122	161 [1]	- [1,2]	- [1,2]
162	S__-27	0.0283	33	122	194 [1]	205 [1]	- [1,2]	218	304 [1]	317 [1]	- [1,2]	111	151 [1]	157 [1]	- [1,2]	290	371 [1]	383 [1]	- [1,2]
162	S__-30	0.0312	33	148	233 [1]	246 [1]	290 [1]	269	373 [1]	388 [1]	442 [1]	137	185 [1]	192 [1]	217 [1]	356	452 [1]	466 [1]	516 [1]
162	S__-33	0.0346	33	180	282 [1]	297 [1]	350 [1]	336	462 [1]	481 [1]	545 [1]	170	229 [1]	237 [1]	267 [1]	441	557 [1]	574 [1]	634 [1]
250	S__-18	0.0188	33	52	84	- [1,2]	- [1,2]	85	122	- [2]	- [1,2]	37	51	- [2]	- [1,2]	109	145	- [2]	- [1,2]
250	S__-27	0.0283	33	117	186	196	- [1,2]	213	298	310	- [1,2]	96	130	135	- [1,2]	268	343	354	- [1,2]
250	S__-30	0.0312	33	141	223	235	277 [1]	264	365	381	433 [1]	119	161	167	189 [1]	330	420	433	479 [1]
250	S__-33	0.0346	33	173	271	285	336 [1]	330	453	472	535	150	201	209	235 [1]	411	519	535	591 [1]
250	S__-43	0.0451	33	287	443	466	547 [1]	580	780	810	913 [1]	267	351	364	407 [1]	720	892	918	1006 [1]
250	S__-54	0.0566	33	433	657	690	806 [1]	891	1178	1221	1369 [1]	430	556	574	639 [1]	1142	1392	1429	1558 [1]
250	S__-54	0.0566	50	656	996	1046	1222 [1]	1350	1785	1850	2075 [1]	652	842	870	968 [1]	1730	2109	2165	2361 [1]
250	S__-54	0.0566	57	748	1135	1193	1393 [1]	1539	2035	2109	2365 [1]	743	960	992	1104 [1]	1972	2405	2469	2692 [1]
250	S__-68	0.0713	33	654	977	1024	1191 [1]	1368	1778	1838	2050 [1]	693	880	907	1004 [1]	1815	2179	2233	2421 [1]
250	S__-68	0.0713	50	990	1480	1552	1805 [1]	2073	2693	2785	3106 [1]	1049	1333	1375	1521 [1]	2750	3302	3384	3669 [1]
250	S__-68	0.0713	57	1129	1687	1769	2057 [1]	2363	3070	3175	3541 [1]	1196	1519	1567	1734 [1]	3135	3764	3857	4182 [1]
350	S__-18	0.0188	33	49	80	- [2]	- [2]	83	119	- [2]	- [2]	28	40	42 [2]	48 [2]	98	130	- [2]	- [2]
350	S__-27	0.0283	33	112	177	187	- [2]	209	292	304	- [2]	81	111	115	130 [2]	247	316	327	- [2]
350	S__-30	0.0312	33	135	214	225	266	259	359	373	425	103	139	144	163	306	389	402	445
350	S__-33	0.0346	33	166	260	274	323	324	445	463	526	131	175	182	205	384	484	499	551
350	S__-43	0.0451	33	278	428	451	528	571	768	798	900	240	315	326	365	680	842	866	949
350	S__-54	0.0566	33	420	638	670	783	879	1162	1204	1351	392	507	524	583	1086	1324	1359	1482
350	S__-54	0.0566	50	637	967	1016	1186	1331	1761	1825	2046	594	768	794	883	1645	2005	2059	2245
350	S__-54	0.0566	57	726	1102	1158	1352	1518	2007	2080	2333	678	876	905	1007	1875	2286	2347	2559
350	S__-68	0.0713	33	637	951	998	1160	1351	1756	1816	2025	640	813	839	928	1736	2085	2137	2317
350	S__-68	0.0713	50	965	1441	1512	1758	2047	2660	2751	3068	970	1232	1271	1406	2631	3159	3238	3510
350	S__-68	0.0713	57	1100	1643	1723	2004	2334	3033	3136	3497	1106	1405	1449	1603	2999	3601	3691	4002
362	S__-18	0.0188	33	49	79	- [2]	- [2]	82	119	- [2]	- [2]	27	39	- [2]	- [2]	97	128	- [2]	- [2]
362	S__-27	0.0283	33	111	177	186	- [2]	209	291	303	- [2]	80	108	113	- [2]	245	313	324	- [2]
362	S__-30	0.0312	33	135	213	224	265	258	358	373	424	101	136	141	160	304	386	398	441
362	S__-33	0.0346	33	165	259	273	322	323	444	462	525	129	173	179	202	381	480	495	547
362	S__-43	0.0451	33	277	427	449	526	570	767	796	898	236	311	322	360	675	836	860	943
362	S__-54	0.0566	33	419	636	668	780	877	1160	1202	1348	388	501	518	577	1079	1316	1351	1473
362	S__-54	0.0566	50	634	963	1012	1182	1329	1758	1822	2043	588	760	785	874	1635	1994	2047	2232
362	S__-54	0.0566	57	723	1098	1154	1347	1515	2004	2077	2329	670	866	895	996	1864	2273	2333	2544
362	S__-68	0.0713	33	635	948	995	1157	1349	1753	1813	2022	635	806	831	920	1728	2074	2126	2305
362	S__-68	0.0713	50	962	1437	1507	1752	2044	2657	2747	3064	961	1221	1259	1393	2618	3143	3221	3492
362	S__-68	0.0713	57	1096	1638	1718	1998	2330	3029	3132	3492	1096	1392	1436	1589	2984	3583	3672	3981
400	S__-27	0.0283	33	109	174	183	- [2]	207	289	301	- [2]	75	102	106	- [2]	238	305	315	- [2]
400	S__-30	0.0312	33	133	210	221	261	257	356	370	421	95	129	134	151	296	376	388	429
400	S__-33	0.0346	33	163	256	269	317	322	442	460	522	122	164	170	192	372	469	483	534
400	S__-43	0.0451	33	274	422	444	520	567	763	792	893	227	299	309	346	662	819	843	924
400	S__-54	0.0566	33	415	629	661	772	873	1155	1197	1342	376	485	502	558	1061	1293	1328	1448
400	S__-54	0.0566	50	628	954	1002	1170	1323	1750	1813	2034	569	735	760	846	1607	1960	2012	2194
400	S__-54	0.0566	57	716	1087	1142	1334	1509	1995	2067	2319	649	838	866	964	1832	2234	2293	2501
400	S__-68	0.0713	33	629	940	986	1147	1344	1746	1806	2014	617	784	809	895	1702	2044	2094	2271
400	S__-68	0.0713	50	953	1424	1494	1737	2036	2646	2736	3051	936	1188	1226	1356	2579	3096	3173	3440
400	S__-68	0.0713	57	1087	1624	1703	1980	2321	3016	3119	3478	1067	1354	1397	1546	2940	3530	3618	3922

1. *Bearing length to web height ratio, N/h exceeds AISI S100 Section C3.4 limit of 2.0.*
2. *Bearing length to thickness ratio, N/t exceeds AISI S100 Section C3.4 limit of 210.*

Table 7: Allowable Web Crippling Loads - Single Members (continued)

Section Depth	Designation	Design Thickness (in)	Fy (ksi)	Condition 1				Condition 2				Condition 3				Condition 4			
				Bearing Length (in)				Bearing Length (in)				Bearing Length (in)				Bearing Length (in)			
				1	3.5	4	6	1	3.5	4	6	1	3.5	4	6	1	3.5	4	6
550	S__-27	0.0283	33	103	164	173	- [2]	202	282	294	- [2]	58	79	82	- [2]	214	274	283	- [2]
550	S__-30	0.0312	33	126	199	210	248	251	348	362	412	76	103	106	120	268	341	351	389
550	S__-33	0.0346	33	155	243	256	302	315	432	450	511	100	134	139	157	339	428	441	487
550	S__-43	0.0451	33	262	405	426	499	556	749	778	877	195	256	265	297	614	760	782	858
550	S__-54	0.0566	33	400	607	638	745	859	1136	1177	1320	331	428	443	493	995	1213	1246	1358
550	S__-54	0.0566	50	606	920	966	1128	1302	1722	1784	2001	502	649	671	746	1508	1838	1887	2058
550	S__-54	0.0566	57	690	1048	1102	1286	1484	1963	2034	2281	573	740	765	851	1719	2095	2151	2346
550	S__-68	0.0713	33	609	910	955	1111	1324	1721	1780	1985	557	707	729	807	1611	1934	1982	2149
550	S__-68	0.0713	50	923	1380	1447	1683	2007	2608	2697	3007	844	1071	1105	1223	2441	2931	3003	3256
550	S__-68	0.0713	57	1053	1573	1650	1918	2287	2973	3074	3428	962	1221	1260	1394	2782	3341	3424	3712
600	S__-30	0.0312	33	124	196	206	243	249	345	359	409	70	95	98	111	260	330	340	377
600	S__-33	0.0346	33	153	240	253	297	313	430	447	507	93	125	130	146	329	416	429	473
600	S__-43	0.0451	33	259	400	420	493	553	745	773	872	185	243	252	282	600	743	764	838
600	S__-54	0.0566	33	395	600	631	736	855	1131	1172	1314	318	411	425	473	975	1189	1221	1331
600	S__-54	0.0566	50	599	909	956	1116	1295	1713	1775	1991	482	623	644	716	1478	1802	1850	2017
600	S__-54	0.0566	57	683	1037	1089	1272	1477	1953	2024	2269	550	710	734	817	1685	2054	2109	2299
600	S__-68	0.0713	33	604	902	946	1100	1318	1713	1772	1976	539	684	706	781	1583	1901	1949	2113
600	S__-68	0.0713	50	914	1366	1433	1666	1998	2596	2685	2994	816	1036	1069	1183	2399	2881	2952	3201
600	S__-68	0.0713	57	1042	1557	1634	1900	2277	2959	3061	3413	930	1181	1219	1348	2735	3284	3366	3649
600	S__-97	0.1017	33	1157	1684	1762	2034	2575	3260	3361	3714	1175	1455	1497	1641	3306	3884	3969	4267
600	S__-97	0.1017	50	1752	2551	2669	3081	3902	4939	5093	5628	1781	2205	2268	2487	5010	5885	6014	6466
600	S__-97	0.1017	57	1998	2908	3043	3513	4448	5630	5805	6415	2030	2514	2585	2835	5711	6708	6856	7371
600	S__-118	0.1242	33	1669	2393	2500	2874	3760	4691	4830	5310	1805	2204	2263	2469	4986	5789	5909	6323
600	S__-118	0.1242	50	2528	3625	3788	4354	5698	7108	7318	8046	2734	3339	3429	3741	7555	8772	8952	9581
600	S__-118	0.1242	57	2882	4133	4318	4964	6495	8103	8342	9172	3117	3807	3909	4265	8612	10000	10206	10922
800	S__-43	0.0451	33	247	381	401	470	542	730	757	854	150	197	204	228	548	678	698	765
800	S__-54	0.0566	33	379	576	605	706	839	1110	1150	1290	270	349	361	402	904	1102	1131	1234
800	S__-54	0.0566	50	575	872	917	1070	1272	1682	1743	1955	409	529	547	608	1370	1670	1714	1869
800	S__-54	0.0566	57	655	995	1045	1220	1450	1918	1987	2228	467	603	623	694	1561	1903	1954	2131
800	S__-68	0.0713	33	582	870	912	1061	1297	1686	1744	1944	473	600	619	685	1485	1783	1827	1981
800	S__-68	0.0713	50	882	1318	1382	1607	1966	2555	2642	2946	716	910	939	1038	2250	2701	2768	3001
800	S__-68	0.0713	57	1005	1502	1576	1832	2241	2912	3012	3358	817	1037	1070	1184	2565	3079	3156	3421
800	S__-97	0.1017	33	1123	1635	1711	1975	2541	3216	3316	3665	1068	1322	1360	1491	3142	3691	3773	4056
800	S__-97	0.1017	50	1702	2477	2592	2992	3850	4873	5025	5553	1618	2003	2060	2259	4761	5593	5716	6145
800	S__-97	0.1017	57	1940	2824	2955	3411	4389	5555	5728	6330	1844	2284	2349	2575	5428	6376	6517	7006
800	S__-118	0.1242	33	1625	2330	2435	2799	3715	4635	4771	5246	1662	2030	2084	2274	4767	5535	5649	6046
800	S__-118	0.1242	50	2462	3531	3689	4241	5629	7023	7229	7949	2518	3075	3158	3445	7223	8387	8559	9160
800	S__-118	0.1242	57	2807	4025	4206	4835	6417	8006	8241	9061	2871	3506	3600	3928	8234	9561	9758	10443
1000	S__-54	0.0566	33	365	554	582	680	826	1092	1132	1269	228	295	305	339	841	1026	1053	1148
1000	S__-54	0.0566	50	553	840	882	1031	1251	1655	1715	1923	346	447	462	514	1275	1554	1595	1740
1000	S__-54	0.0566	57	631	958	1006	1175	1426	1887	1955	2192	394	509	526	586	1453	1772	1819	1983
1000	S__-68	0.0713	33	563	842	883	1027	1279	1662	1719	1917	415	527	544	602	1398	1679	1721	1865
1000	S__-68	0.0713	50	854	1275	1338	1555	1938	2518	2604	2904	629	799	824	912	2119	2544	2607	2826
1000	S__-68	0.0713	57	973	1454	1525	1773	2209	2871	2969	3310	717	911	940	1040	2415	2900	2972	3222
1000	S__-97	0.1017	33	1094	1592	1666	1923	2511	3178	3277	3622	974	1206	1240	1360	2999	3523	3601	3871
1000	S__-97	0.1017	50	1657	2412	2525	2914	3805	4815	4965	5487	1476	1827	1879	2060	4545	5338	5456	5866
1000	S__-97	0.1017	57	1889	2750	2878	3322	4337	5490	5661	6255	1682	2083	2142	2349	5181	6086	6220	6687
1000	S__-118	0.1242	33	1587	2276	2379	2734	3676	4586	4721	5190	1538	1878	1928	2104	4577	5314	5423	5804
1000	S__-118	0.1242	50	2405	3449	3604	4143	5569	6948	7152	7864	2330	2845	2921	3187	6934	8051	8217	8794
1000	S__-118	0.1242	57	2742	3932	4108	4722	6349	7920	8154	8965	2656	3243	3330	3634	7905	9179	9367	10025

1. *Bearing length to web height ratio, N/h exceeds AISI S100 Section C3.4 limit of 2.0.*
2. *Bearing length to thickness ratio, N/t exceeds AISI S100 Section C3.4 limit of 210.*

Table 7: Allowable Web Crippling Loads - Single Members (continued)

Section Depth	Designation	Design Thickness (in)	Fy (ksi)	Condition 1				Condition 2				Condition 3				Condition 4			
				Bearing Length (in)				Bearing Length (in)				Bearing Length (in)				Bearing Length (in)			
				1	3.5	4	6	1	3.5	4	6	1	3.5	4	6	1	3.5	4	6
1200	S__-68	0.0713	33	547	816	857	996	1262	1640	1696	1892	363	462	476	527	1320	1585	1625	1762
1200	S__-68	0.0713	50	828	1237	1298	1509	1913	2485	2570	2866	551	699	721	798	2001	2402	2462	2669
1200	S__-68	0.0713	57	944	1410	1479	1720	2180	2833	2930	3267	628	797	822	910	2281	2738	2806	3043
1200	S__-97	0.1017	33	1068	1554	1626	1877	2484	3144	3242	3583	889	1101	1133	1242	2871	3372	3446	3705
1200	S__-97	0.1017	50	1618	2355	2464	2844	3764	4764	4912	5428	1348	1668	1716	1882	4350	5109	5222	5614
1200	S__-97	0.1017	57	1844	2684	2809	3242	4291	5431	5600	6188	1536	1902	1956	2145	4959	5825	5953	6400
1200	S__-118	0.1242	33	1554	2228	2328	2676	3640	4541	4675	5140	1426	1741	1788	1951	4405	5115	5220	5587
1200	S__-118	0.1242	50	2354	3375	3527	4054	5515	6881	7083	7788	2161	2638	2709	2956	6675	7750	7910	8465
1200	S__-118	0.1242	57	2684	3848	4021	4622	6287	7844	8075	8878	2463	3008	3089	3370	7609	8835	9017	9650
1400	S__-68	0.0713	33	531	793	832	968	1247	1621	1676	1869	316	401	414	458	1249	1500	1537	1666
1400	S__-68	0.0713	50	805	1202	1261	1466	1889	2455	2539	2831	479	608	627	694	1892	2272	2328	2525
1400	S__-68	0.0713	57	917	1370	1438	1671	2154	2799	2895	3228	546	693	715	791	2157	2590	2654	2878
1400	S__-97	0.1017	33	1043	1519	1589	1835	2459	3113	3210	3547	812	1005	1034	1134	2753	3234	3305	3553
1400	S__-97	0.1017	50	1581	2301	2408	2780	3726	4716	4863	5374	1230	1523	1567	1718	4171	4900	5008	5384
1400	S__-97	0.1017	57	1802	2624	2745	3169	4248	5377	5544	6127	1403	1736	1786	1958	4755	5585	5709	6137
1400	S__-118	0.1242	33	1523	2183	2281	2622	3608	4501	4633	5094	1324	1617	1660	1811	4249	4933	5035	5388
1400	S__-118	0.1242	50	2307	3308	3456	3973	5466	6819	7020	7719	2006	2449	2515	2744	6437	7474	7628	8164
1400	S__-118	0.1242	57	2630	3771	3940	4529	6231	7774	8003	8799	2286	2792	2867	3128	7339	8521	8696	9306
1600	S__-97	0.1017	33	1021	1486	1555	1796	2437	3084	3180	3514	740	916	943	1033	2644	3105	3174	3412
1600	S__-97	0.1017	50	1547	2252	2357	2721	3692	4673	4818	5324	1121	1388	1428	1566	4005	4705	4809	5170
1600	S__-97	0.1017	57	1764	2567	2687	3101	4209	5327	5493	6070	1278	1583	1628	1785	4566	5363	5482	5893
1600	S__-118	0.1242	33	1494	2142	2238	2573	3577	4463	4595	5052	1229	1501	1541	1681	4103	4764	4862	5204
1600	S__-118	0.1242	50	2263	3245	3391	3898	5420	6762	6961	7654	1862	2274	2335	2548	6217	7219	7367	7884
1600	S__-118	0.1242	57	2580	3700	3866	4444	6179	7709	7936	8726	2123	2592	2662	2904	7087	8229	8399	8988

1. *Bearing length to web height ratio, N/h exceeds AISI S100 Section C3.4 limit of 2.0.*
2. *Bearing length to thickness ratio, N/t exceeds AISI S100 Section C3.4 limit of 210.*

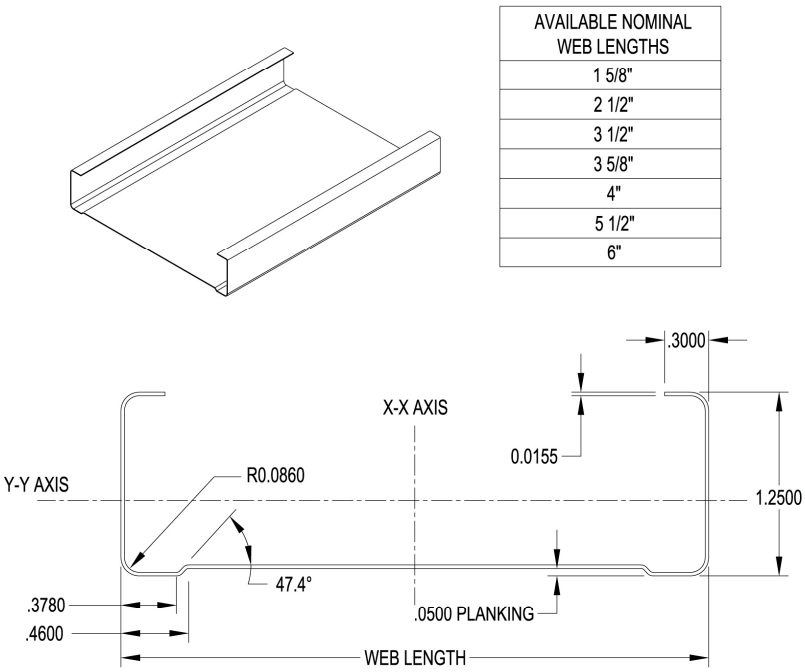

FIGURE 1 – SFS – D25 C-SHAPED STUD

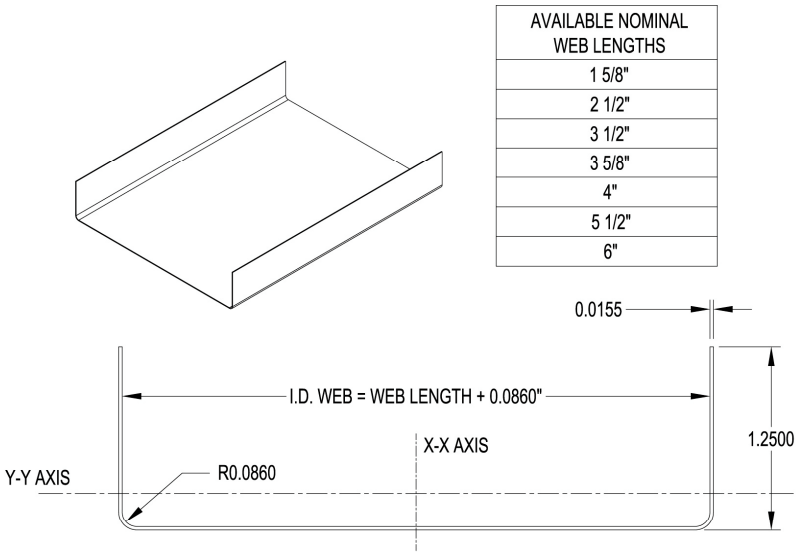

FIGURE 2 – SFT – D25 TRACK

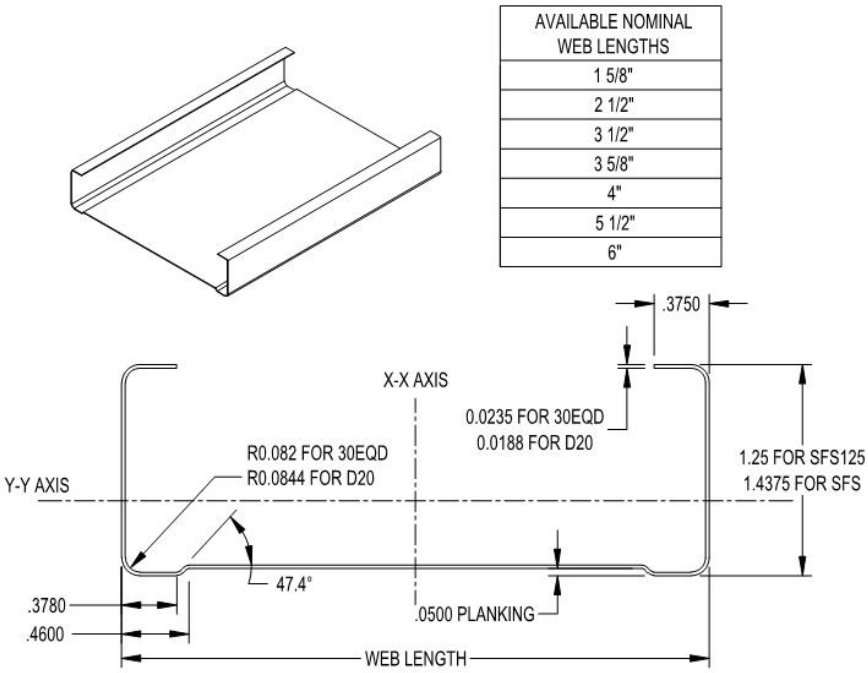

FIGURE 3 – SFS 30EQD & D20 C-SHAPED STUD

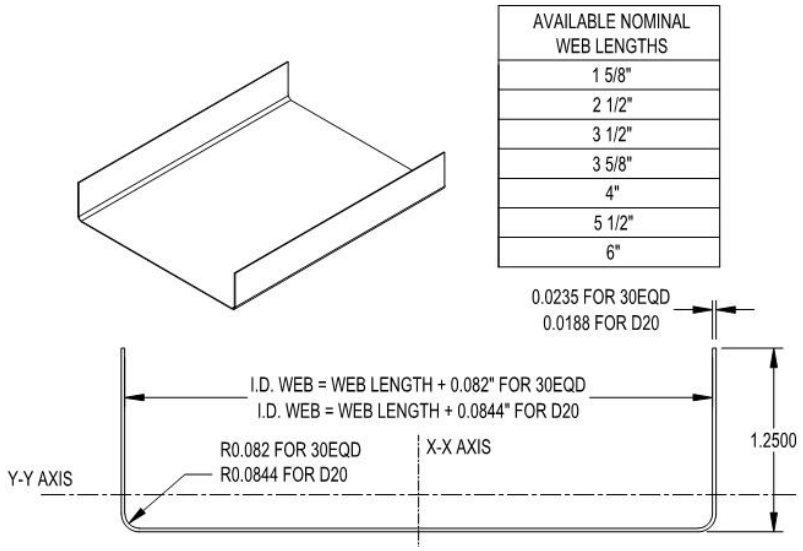

FIGURE 4 – SFT 30EQD & D20 TRACK

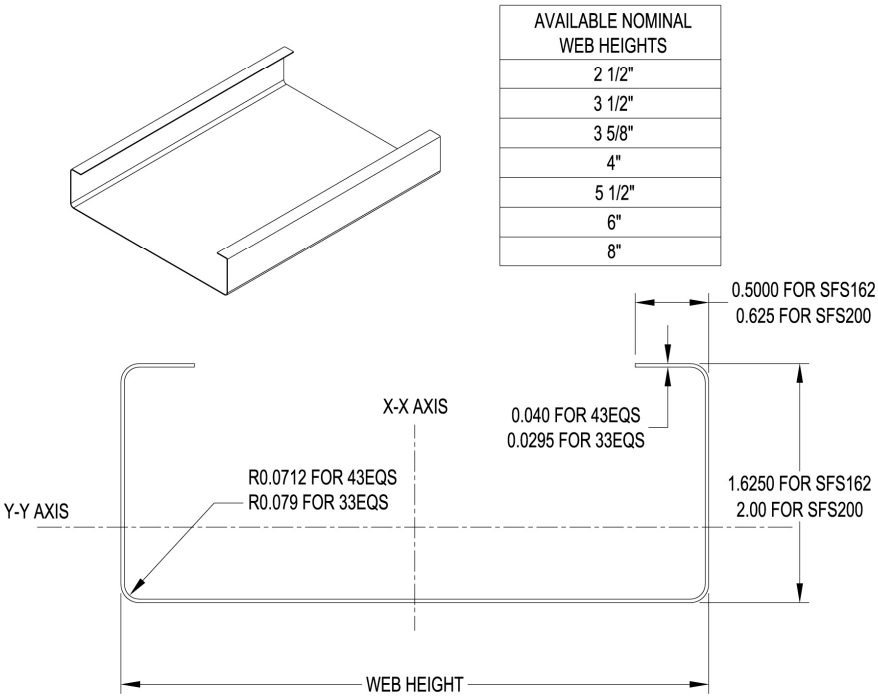

FIGURE 5 – SFS – 43EQS & 33EQS C-SHAPED STUD

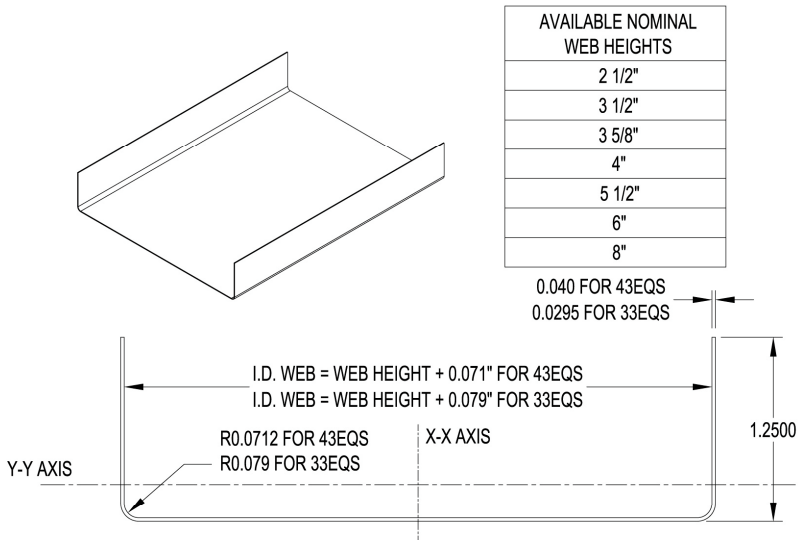

FOR SI: 1 INCH = 25.4

FIGURE 6 – SFT – 43EQS & 33EQS TRACK

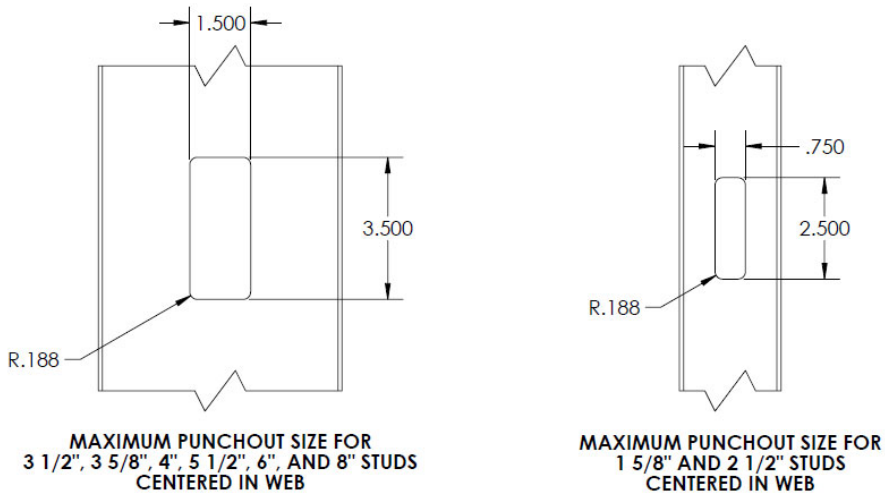

FIGURE 7 – PUNCHOUT SIZES

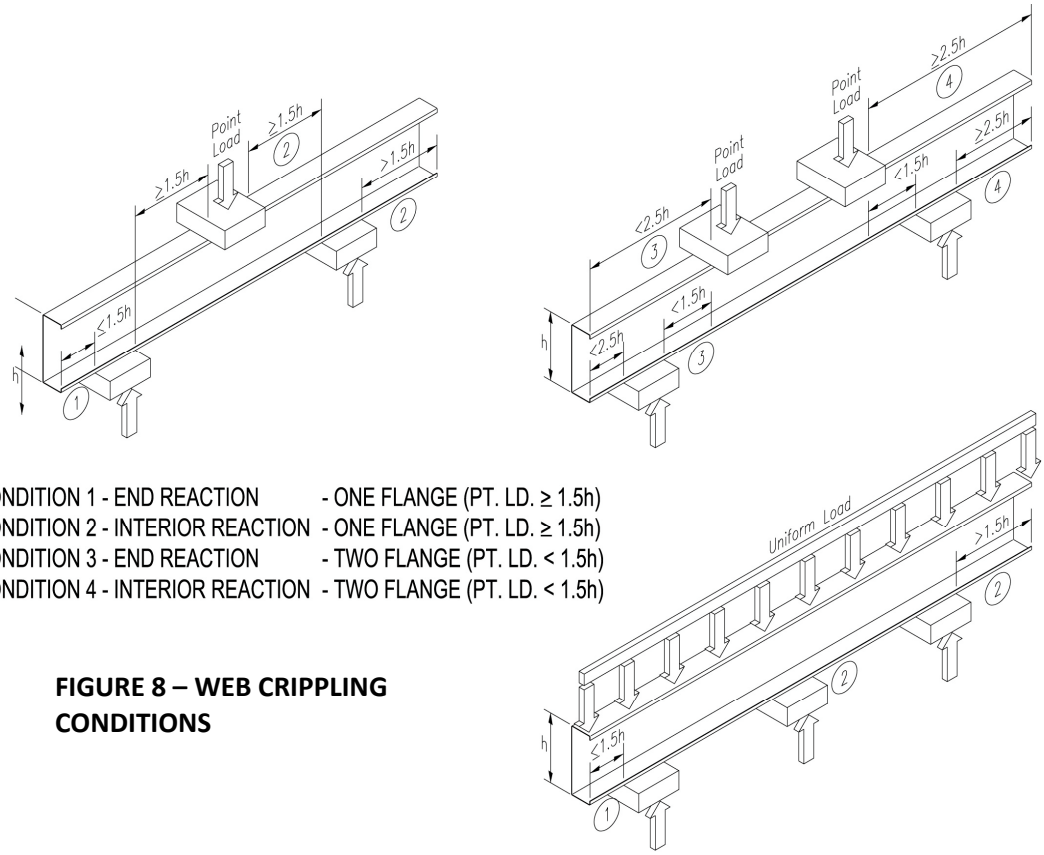

1. CONDITION 1 - END REACTION - ONE FLANGE (PT. LD. ≥ 1.5h)
2. CONDITION 2 - INTERIOR REACTION - ONE FLANGE (PT. LD. ≥ 1.5h)
3. CONDITION 3 - END REACTION - TWO FLANGE (PT. LD. < 1.5h)
4. CONDITION 4 - INTERIOR REACTION - TWO FLANGE (PT. LD. < 1.5h)

FIGURE 8 – WEB CRIPPLING CONDITIONS

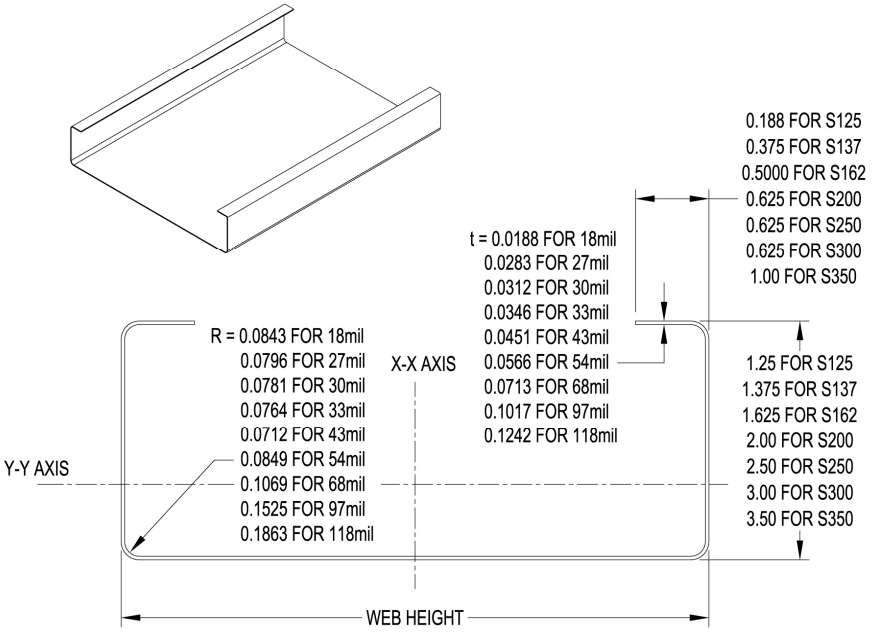

AVAILABLE NOMINAL WEB HEIGHTS
1 5/8"
2 1/2"
3 1/2"
3 5/8"
4"
5 1/2"
6"
8"
10"
12"
14"
16"

FIGURE 9 – STANDARD 'S' C-SHAPED STUD AND JOIST

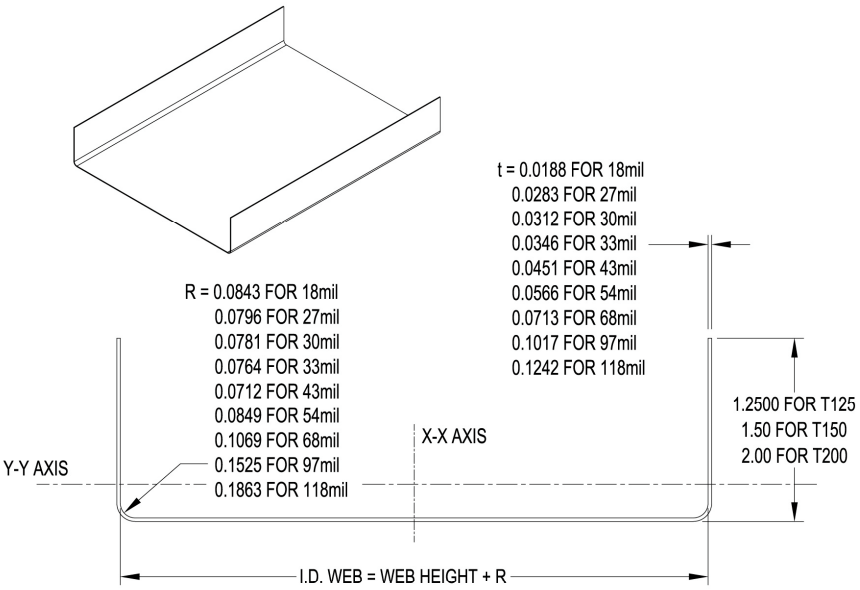

AVAILABLE NOMINAL WEB HEIGHTS
1 5/8"
2 1/2"
3 1/2"
3 5/8"
4"
5 1/2"
6"
8"
10"
12"

FOR SI: 1 INCH = 25.4mm

FIGURE 10 – STANDARD 'T' TRACK

FLORIDA SUPPLEMENT

SUPREME STEEL FRAMING SYSTEM ASSOCIATION™ (SSFSA)
Post Office Box 11215
Spokane, Washington 99211
(503) 343-9000
www.ssfsa.com
mail@ssfsa.com

ADDITIONAL COMPANIES AND ADDITIONAL MANUFACTURERS

AllSteel & Gypsum Products, Inc.
1250 NW 23 Ave
Ft. Lauderdale, FL 33311
(954) 587-1900
www.allsteelproducts.com

Consolidated Fabricators Corp.
8584 Mulberry Avenue
Fontana, California 92335
(909) 770-8920
www.confabbpd.com

Quail Run Building Materials, Inc.
2102 West Lone Cactus Drive
Phoenix, Arizona 85027
(602) 269-2316
www.qrbm.com

SCAFCO Steel Stud Manufacturing Company
Post Office Box 11215
Spokane, Washington 99211
(509) 343-9000
www.scafco.com

Steel Construction Systems
11250 Astronaut Boulevard
Orlando, Florida 32837
(800) 548-8499
www.steelconsystems.com

United Metal Products, Inc.
234 North Sherman Avenue
Corona, California 92882
(951) 739-9535
www.unitedmetalproducts.info

R & P Supply
2642 E Lone Mountain RD
Las Vegas, NV 89081
(702) 400-8539
www.rpsupplyinc.com

Telling Industries, LLC
1050 Kennedy Road
Windsor, CT 06095
(860) 731-7975
www.tellingindustries.com

Telling Industries, LLC - Cambridge
2105 Larrick Rd.
Cambridge, OH 73725
(740) 435-8900
www.tellingindustries.com

Telling Industries, LLC – Osceola
1400 Southwire Drive
Osceola, AR 72370
(870) 563-6065
www.tellingindustries.com

COLD-FORMED STEEL FRAMING MEMBERS

CSI Sections:
05 40 00–Cold Formed Metal Framing
05 41 00–Structural Metal Stud Framing
05 42 00–Cold Formed Metal Joist Framing
09 21 16–Gypsum Board Assemblies
09 22 00–Supports for Plaster and Gypsum Board
09 22 16–Non-Structural Metal Stud Framing

1.0 RECOGNITION

Supreme Steel Framing System Association™ (SSFSA) Cold-formed Steel Framing Members evaluated in IAPMO UES ER-313 are satisfactory alternatives to the cold-formed steel floor framing, roof framing, ceiling framing, wall framing, and interior non-load-bearing composite wall framing members described in the following codes and regulations:

- 2020 Florida Building Code, Building (FBC, Building)
- 2020 Florida Building Code, Residential (FBC, Residential)

2.0 FINDINGS

The Cold-Formed Steel Framing Members described in IAPMO UES Evaluation Report ER-313 comply with the codes listed in Section 1.0 of this supplement". Use and installation shall be in accordance with ER-313, this report supplement, the approved construction documents, and Sections 2210, 2211, and Chapter 25 of the FBC, Building, or Section R301.2 of the FBC, Residential, as applicable.

For compliance with the high-velocity hurricane zone (HVHZ) provisions of the FBC, Building, the following specific requirements shall be met:

- Product design, fabrication, and erection shall be in accordance with FBC, Building, Section 2222.
- Buildings shall be designed to withstand the HVHZ loads described in FBC, Building, Chapter 16.
- Products shall conform to the standards listed in FBC, Building, Section 2214.3, Item 2.
- Metal shall be protected as required by FBC, Building, Section 2222.6 and galvanization shall have G90 minimum coating designation and conform to ASTM A1003 in accordance with 2020 FBC, Building, Section 2214.3, Item 5b, as applicable.
- Positive attachment connections shall be provided in accordance with FBC, Building, Sections 2222.3.2 and 2222.4.2.

- No increase in strength shall be allowed for the effect of cold work in accordance with FBC, Building, Section 2222.3.5. The values in Table 5 (Pages 8 through 17) of ER-313 for Allowable Moment at Yield (M_{a-L}) that are followed by an asterisk are derived using the increase in strength due to the effects of cold working. Alternate values of M_{a-L} and M_{a-D} (Allowable Moment Based on Distortional Buckling) for these steel sections are listed in Table 8 below for use in accordance with the Florida Building Codes listed in Section 1.1 of this supplement.

For products falling under Section 5(d) of Florida Rule 61G20-3.001, verification is required that the report holder's quality assurance program is audited by a quality assurance entity, approved by the Florida Building Commission (or the building official when the report holder does not possess an approval by the Commission), to provide oversight and determine that the products are being manufactured as described in this evaluation report to establish continual product performance.

This supplement expires concurrently with ER 313.

For additional information about this evaluation report please visit www.uniform-es.org or email us at info@uniform-es.org

TABLE 8 - REDUCED MOMENTS FOR USE IN FLORIDA HIGH-VELOCITY HURRICANE ZONES (HVHZ)

Section	F_y (ksi)	Ma-L (in-k)	Ma-D (in-k)	Section	F_y (ksi)	Ma-L (in-k)	Ma-D (in-k)	Section	F_y (ksi)	Ma-L (in-k)	Ma-D (in-k)
250S125-54	33	4.30	4.38	600S162-118	33	37.23	37.23	800S250-97	33	63.18	63.18
250S125-68	33	5.26	5.28	600S162-118	50	56.41	56.41	800S250-97	50	92.09	86.31
250S137-43	33	4.12	4.12	600S200-54	33	21.86	20.63	800S250-118	33	75.29	75.29
250S137-54	33	5.03	5.03	600S200-68	33	27.01	27.01	800S250-118	50	113.23	111.29
250S137-54	50	7.41	7.62	600S200-68	50	40.03	36.99	800S300-97	33	68.43	67.62
250S137-68	33	6.10	6.10	600S200-97	33	36.96	36.96	800S300-118	33	83.50	84.81
250S137-68	50	9.24	9.24	600S200-97	50	56.01	56.01	800S300-118	50	123.27	116.86
250S162-43	33	4.77	4.77	600S200-118	33	43.74	43.74	800S350-97	33	82.45	81.24
250S162-54	33	5.84	5.84	600S200-118	50	66.28	66.28	800S350-118	33	99.00	99.00
250S162-54	50	8.62	8.79	600S250-68	33	30.08	29.43	800S350-118	50	144.09	139.99
250S162-68	33	7.11	7.11	600S250-97	33	42.79	42.79	1000S162-118	33	79.71	79.71
250S162-68	50	10.78	10.78	600S250-97	50	62.25	61.57	1000S200-118	33	91.10	91.10
350S125-68	33	8.08	8.34	600S250-118	33	50.80	50.80	1000S250-68	33	60.34	52.19
350S162-68	33	10.89	11.12	600S250-118	50	76.38	76.98	1000S250-97	33	86.26	83.45
362S200-68	33	13.58	13.80	600S300-97	33	46.77	48.24	1000S250-97	50	126.04	111.26
550S125-68	33	15.83	15.87	600S300-118	33	56.94	57.87	1000S250-118	33	103.07	103.07
550S162-43	33	13.53	12.31	600S300-118	50	83.95	83.17	1000S250-118	50	155.07	145.16
550S162-54	33	16.70	16.43	600S350-97	33	56.70	56.85	1000S300-97	33	92.79	87.62
550S162-54	50	24.60	21.99	600S350-118	33	67.87	67.87	1000S300-118	33	113.35	113.37
550S162-68	33	20.56	20.56	600S350-118	50	98.88	100.01	1000S300-118	50	167.61	151.74
550S162-68	50	31.15	29.58	800S137-97	33	42.47	42.47	1000S350-97	33	110.93	105.24
600S125-68	33	18.00	18.05	800S162-97	33	47.98	47.98	1000S350-118	33	133.47	133.47
600S137-68	33	20.38	20.38	800S162-118	33	56.83	56.83	1000S350-118	50	194.36	181.35
600S137-97	33	27.59	27.59	800S162-118	50	86.11	86.11	1200S300-97	33	119.85	107.60
600S137-97	50	41.80	41.80	800S200-54	33	32.47	28.47	1200S300-118	33	146.48	140.62
600S162-43	33	15.25	13.56	800S200-68	33	40.21	38.43	1200S300-118	50	216.94	186.72
600S162-54	33	18.84	18.18	800S200-68	50	59.66	51.12	1200S350-97	33	142.10	129.52
600S162-54	50	27.76	24.23	800S200-97	33	55.35	55.35	1200S350-118	33	171.23	167.10
600S162-68	33	23.22	23.22	800S200-97	50	83.86	81.15	1200S350-118	50	249.68	223.19
600S162-68	50	35.18	32.75	800S200-118	33	65.78	65.78	1400S350-97	33	175.97	153.49
600S162-97	33	31.60	31.60	800S200-118	50	99.67	99.67	1400S350-118	33	212.29	199.49
600S162-97	50	47.88	47.88	800S250-68	33	44.26	40.86	1400S350-118	50	310.00	264.55

FOR SI: 1 inch = 25.4 mm; 1 ksi (1000 psi) = 6.9 N/mm^2; 1 in-k = 113 N-m